BEng Mechanical Engineering

Faculty of Computing, Engineering and the Built Environment

School of Engineering and Built Environment

ENG5101 Group Component Design and Manufacture

Student Name: **Group 21**

Jay Parekh, Ahsan Ramzan, Imran Siddique, Inayat Osmani

Student Number: S14140141, S18148866, S18124711, S17158181

Submission Date: 29th May 2020

Supervisor: Anthony Hayward, Matthew King.

Abstract

The team learnt how to program their assigned machines, with an insight into manufacturer specific features. CAD drawings and lab sheets were used to simulate and reproduce a compressed air engine, followed by a report outlining the steps taken. The kinematic joints and drawing tolerances were to be set according to the use of the component. The most feasible software was to be decided. Also, the project management was reviewed.

The most effective software was ShopMill although CIMCO is much better value. By investing in training staff to use CIMCO, the CNC coding skillset can be used across many CNC machines, regardless of their manufacturer, unlike in ShopMill where only basic training is required. Revolute joints were used at rotating joints whereas a rigid joint was used for the end cap and prismatic joint was used for the piston. The frame was fixed to the base. The piston and cylinder used a close running fit. The end cap used a locational clearance fit to ensure easy assembly while ensuring security. With a lack of English knowledge as well as computer illiteracy within the group, it was challenging at times to keep the team motivated. One member was under a lot of pressure to ensure the entire team understood the task and completed work on time. The assembly was mostly manufactured.

Table of Contents

1 Introduction 1

1.1 Background and problem definition 1

1.2 Scope of the project 1

1.3 Rationale 1

1.4 Aims and objectives 3

2 Review of Existing Knowledge 4

3 Project Management and Methodology 8

4 Design and Development 1

5 Results and Analysis 1

6 Discussion 1

7 Conclusions 3

8 Recommendations 1

9 References 2

1 Introduction

1.1 Background and problem definition

Internal combustion engines are impractical when multiple motors are required. The upkeep is very time consuming as maintenance is complex and multiple fuel tanks require refilling often resulting in downtime. As well as this, they cannot be used in flammable or enclosed environments due to the heat and toxic gases they produce. Multiple compressed air engines can be used together easily as they can be plumbed in parallel using one compressor and tank. The simplicity results in reduced downtime as the engines are easy to maintain and only the complex air compressor must be serviced regularly. The alternative approach produces no toxic gases and only uses electricity to power the compressor. The compressed air engine converts the kinetic energy from the expansion of air to the rotational energy turning the flywheel. CAM was used to design, simulate and manufacture a compressed air engine, produced using a variety of machines.

1.2 Scope of the project

The project tests existing CAD and CNC knowledge in a real-world application, to help understand the project planning methods, as well as the BS4500 standards for tolerancing and how to apply them to the design. The project involved learning new software used for CAM without leaving the workshop, which made the manufacturing process more streamlined. The scope was to understand how this technology can benefit industry.

1.3 Rationale

In 1687, Denis Papin invented a device which used the expansion of compressed air stored in a reservoir to turn a single piston engine. Since then a patent was issued in the 1800's for an engine that varied in displacement depending on the power application, and these engines began to be used in carriages (+ and Cars, 2020). The texcept in pneumatic fuel pumps for use in volatile, flammable environments such as fuel and oil transfer systems (Pneumatic-Driven Liquid Pumps | High Pressure Liquid Pump | Haskel, 2020). In parallel, multiple engines can run off a single supply, reducing complexity and maintenance. ExxonMobil, who regularly transport fuel and oils, would benefit from this technology. Zero Pollution Motors aims to be the first to have a production compressed air

vehicle, called the Air pod (Zero Pollution Motors | the first compressed air-powered car, 2020). This topic was researched to find a low-cost use for this low tolerance technology.

1.4 Aims and objectives

The aim of this project is to design and fabricate a compressed air engine. The engine converts the kinetic energy from the expansion of air to the rotational energy turning the flywheel. Objectives are shown below

- To correctly use BS4500 ISO fits and tolerances.
- To correctly identify the kinematics required to run the compressed air engine
- To correctly program mills and lathes using CNC as well as software suites PROTO TRAK, Okuma, Matsurra, CIMCO and ShopMill, in an efficient manner.
- To produce legible engineering drawings for each stage of the assembly.
- To work as a team to manage the workload effectively.

2 Review of Existing Knowledge

XYZ-SMX 3500 Proto-TRAK Bed Mill

The XYZ-SMX 3500 Proto-TRAK Bed Mill is an XYZ Computer Numerical Control milling and drilling machine.

Reducing workload, time, and effort. Controlled by using CNC codes, it can complete multiple operations during a single program and also has the advantage on manual control. The machine needs manual tool changes, but is only used for light tasks. It works in millimetres. each code has a purpose also can be controlled manually.

It comes with the following standard equipment:

- Programmable Spindle Speed.
- Hardened and Ground Ways.
- 4 Axis DRO.
- 2 or 3 Axis CNC.
- Precision Ground Ball screws.
- Air Power Drawbar.
- Coolant.
- Work Light.
- Auto Lubrication.
- Interlocked Guarding.
- Swarf Tray.

(XYZ-SMX 3500 Proto-TRAK Bed Mill | XYZ Machine Tools, 2020)

XYZ 1060 HS VMC with the SIEMENS 840D touch controller.

The XYZ 1060 HS VMC is a 5 Axis milling machine which features a swivel table fitted with a vice to provide a complete 3D milling program as well as a swarf conveyor system to keep cleaning to a minimum. It also features a hydraulic tool changer to reduce manufacturing time. The machine features a programming wizard called Shop Mill which allows the user to write a program with little knowledge of G code. The machine can also run regular G code programs. In the workshop, a 3D probe measured the datum values. Using a probe ensures a consistent result in mass production.

In the workshop the swivel plane was used to turn the workpiece 90° and CYCLE800() was used to transform the work plane allowing 3D machining programs to operate. It accounts for the kinematic chain offsets, the active workpiece zero from G54 and the tool offsets are transformed to compensate for the rotated plane. Finally, the physical rotary axis is positioned normal to the adjusted work plane (Milling made easy with ShopMill, 2020).

Okuma CNC Lathe with CIMCO controller.

Okuma is an international manufacturer of machines. The industry-leading OSP controller requires existing knowledge of CNC code but has the beneft of providing video simulations for programs, creating optimal operating efficiency.

Okuma's broad range of lathes offers a variety of bore sizes, bed lengths and optional features. This variety allows us to create custom lathe solutions capable of meeting with the desired production need. In reality many parts can be completed on a single machine. The thermo-friendly design

enables the ability to hold tight tolerances and eliminates the need for separate finishing or grinding operations (Okuma ,2020).

Okuma offers a variety of optional extras for the lathe, from sensors to tool changers. This allows parts to be fully manufactured using only the lathe, and running a single program. The lathe uses a thermo-friendly construction to maintain low tolerances as well as eliminating the time required for grinding and finishing.

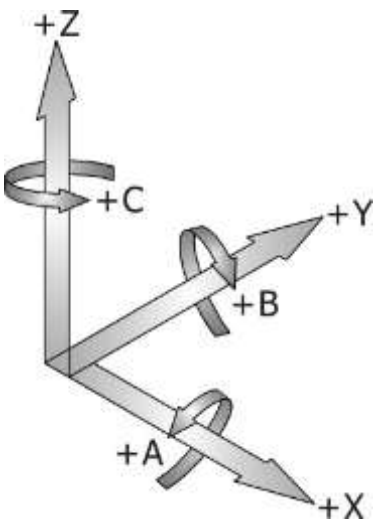

In CNC lathe machine, the parallel direction of the spindle is Z axis. The head direction is negative (-Z), and the direction perpendicular to Z axis is X and Y directions.

You can use the thumb of the left hand (X axis), the index finger (Y axis), and the middle finger (Z axis) to become three axes. The direction indicated by the fingertip is the positive direction of each axis, and the forward direction of the three axes of the machine tool can be easily defined (2020).

Towards the chuck of the lathe Z axis is -Z and X axis is moving toward turret. In addition to the three linear axis there are three other rotating axis and 3 auxiliary axes.

<u>Three rotating axis</u>

- A axis >>>> rotating around X axis

- B axis >>>> rotate around Y axis
- C axis >>>> rotate around Z axis

Three auxiliary axis

- U axis >>>> parallel to X axis
- V axis >>>> parallel to X axis
- W axis >>>> parallel to Z axis

3 Project Management and Methodology

At the start of the semester 2, the class was briefed on the content of the sessions. Brief knowledge about the machines was shared as well as some CNC code knowledge. The following week teams were assigned. Each team had five to six members. To communicate with each other, a WhatsApp group was created as well as a shared OneDrive folder for documents.

- Week 1: A CAD drawing and job sheet of the cylinder with the necessary coordinates was handed over to the group with hidden values. From that sheet the missing lengths angles, tools, G codes, feedrates, spindle speeds, toolpaths and datum were found. It was crucial to identify the datum accurately as all processes depend on the datum. The group member responsible for the part also completed a guide for how the machine is used and an engineering drawing of the part using CATIA.
- Week 2: In this week a CAD drawing and job sheet of the crank shaft with the necessary coordinates was handed over to our team to mill a cylindrical block.
- Week 3: A CAD drawing and job sheet of the piston con rod with the necessary coordinates was handed over to the team to produce the part.
- Week 4: A CAD drawing and job sheet of the cylindrical pivot with the necessary coordinates was handed over to our team in order to make a cylindrical pivot.
- Week 5: A CAD drawing and job sheet of the engine frame with the necessary coordinates was handed over to the team to produce the part.

The Gannt chart is shown.

	Task Name	Duration	Start	Finish
1	**Compressed Air Engine Project**	**7.2 wks**	**Thu 30/01/20**	**Thu 19/03/20**
2	**Machining Lecture**	**5 days**	**Thu 30/01/20**	**Wed 05/02/20**
3	CNC machine Lecture	1 day	Thu 30/01/20	Thu 30/01/20
4	Group discussion about machines	2 days	Fri 31/01/20	Mon 03/02/20
5	Parts Drawing ready	1 day	Tue 04/02/20	Tue 04/02/20
6	Help in CATIA drawing	1 day	Wed 05/02/20	Wed 05/02/20
7	**Cylinder Matsuura Week**	**5 days**	**Thu 06/02/20**	**Wed 12/02/20**
8	Lab day CNC machine	1 day	Thu 06/02/20	Thu 06/02/20
9	CATIA drawing of part	1 day	Fri 07/02/20	Fri 07/02/20
10	Individual Write up of the week	2 days	Mon 10/02/20	Tue 11/02/20
11	Finding solution for problems	1 day	Wed 12/02/20	Wed 12/02/20
12	**Crank Shaft Week**	**5 days**	**Thu 13/02/20**	**Wed 19/02/20**
13	Lab Day CNC machine	1 day	Thu 13/02/20	Thu 13/02/20
14	CATIA Drawing of parts	1 day	Fri 14/02/20	Fri 14/02/20
15	Individual writeup of week	2 days	Mon 17/02/20	Tue 18/02/20
16	Group discussion for issues	1 day	Wed 19/02/20	Wed 19/02/20
17	**Cylindrical Pivot Week**	**5 days**	**Thu 20/02/20**	**Wed 26/02/20**
18	Lab day and essential calculations	1 day	Thu 20/02/20	Thu 20/02/20
19	CATIA drawing and assembly of engine	2 days	Fri 21/02/20	Mon 24/02/20
20	Individual write up of the week	2 days	Tue 25/02/20	Wed 26/02/20
21	**Okume Piston rod week**	**5 days**	**Thu 27/02/20**	**Wed 04/03/20**
22	Lab day and lab sheet reading	1 day	Thu 27/02/20	Thu 27/02/20
23	CATIA Drawing and fit in assembly	2 days	Fri 28/02/20	Mon 02/03/20
24	Individual write up of week	1 day	Tue 03/03/20	Tue 03/03/20
25	Group members meeting and analysis	1 day	Wed 04/03/20	Wed 04/03/20
26	**Engine Frame week**	**5 days**	**Thu 05/03/20**	**Wed 11/03/20**
27	Lab day and calculations	1 day	Thu 05/03/20	Thu 05/03/20
28	CATIA drawing and Dmu kinematics	2 days	Fri 06/03/20	Mon 09/03/20
29	Individual write up	1 day	Tue 10/03/20	Tue 10/03/20
30	Analysis of Assembly of engine	1 day	Wed 11/03/20	Wed 11/03/20

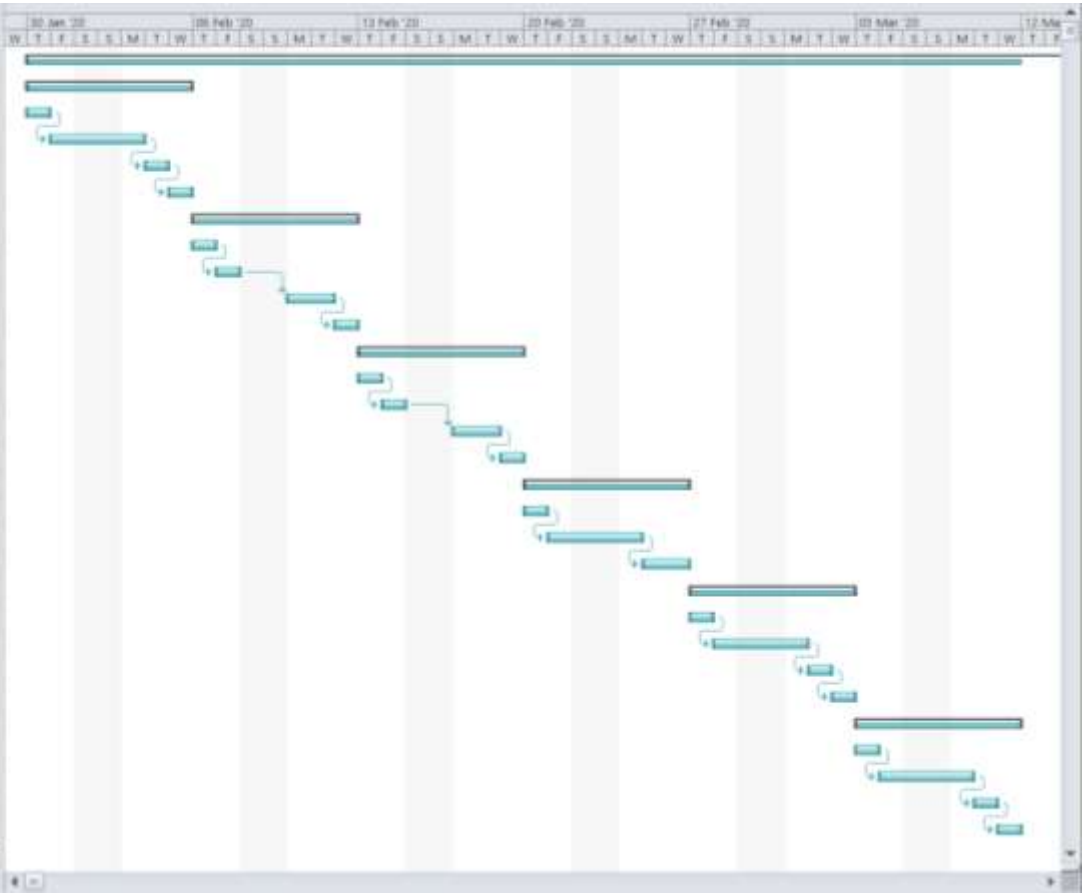

4 Design and Development

Jay Parekh Individual contribution - XYZ 1060 engine frame.

The machine is started.

Top

Press .

Click
.

Click
.

Click
.

Name program 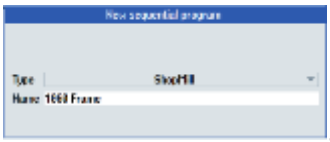
.

Set the work offset as G54, unless additional tooling offsets are required
.

Set the blank shape 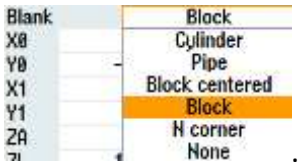
.

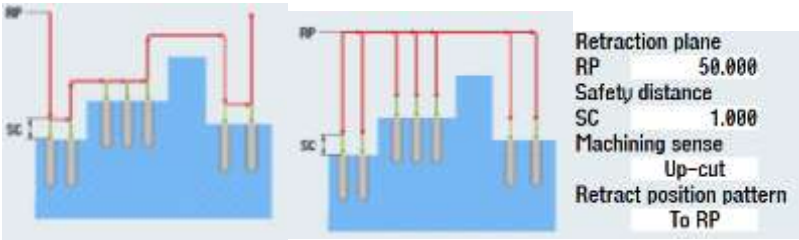

Set:

- X0/Y0 – Datum values.
- X1/Y1 – Lengths.
- ZA – Initial depth.
- ZI – Final depth.
- PL – Machining plane.
- RP – Distance between functions.
- SC – Distance to begin function.
- Machining sense – Direction of the cut.
- Retract position pattern – Optimizes machining times.

When completing a function, click

.

Click and then add the following information.

Click .

Start the coolant wash (M15).

Start the swarf conveyor (M47).

The program is shown.

Click

to swivel workplane.

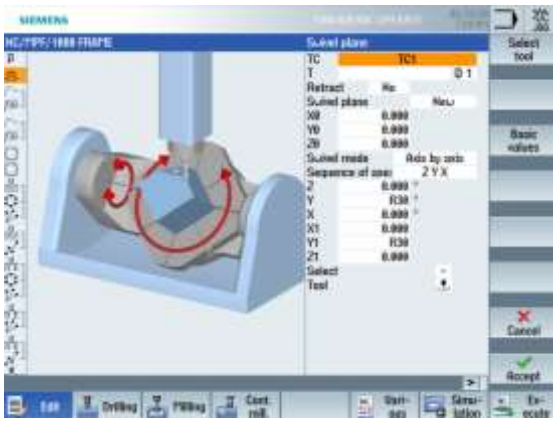

Set:

- X0/Y0/Z0 – Axis reference values.
- X/Y/Z – Rotation around axis.
- X1/Y1/Z1 – New datum values.

The program is shown:

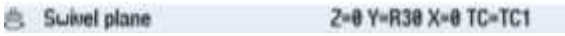

Draw a contour of the right edge of the frame.

Set the starting point. 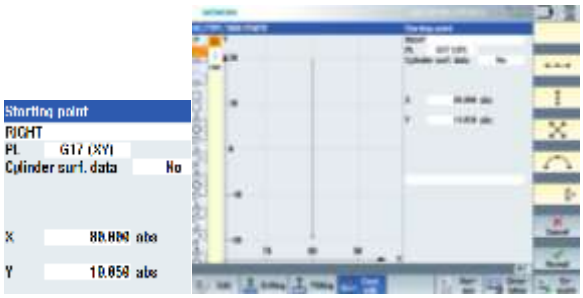

Add a line , -90° to the opposite edge.

The program is shown.

Click

to trim the edge.

Set as defined and using speeds/feeds sheet:

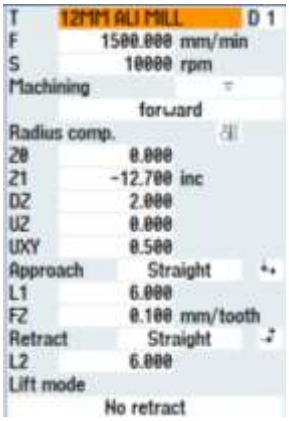

- T – Tool used from magazine.
- F – Linear feedrate in mm/min, from the reference sheet,
- S – Spindle speed in rpm, from the reference sheet.
- Machining – Coolant rate.
- Z0 – Reference Z.
- Z1 – Depth Z.
- DZ – Step depth Z
- UXYZ – Finishing tolerance XYZ
- L1/L2 – Approach/Retract length, to compensate for tool.

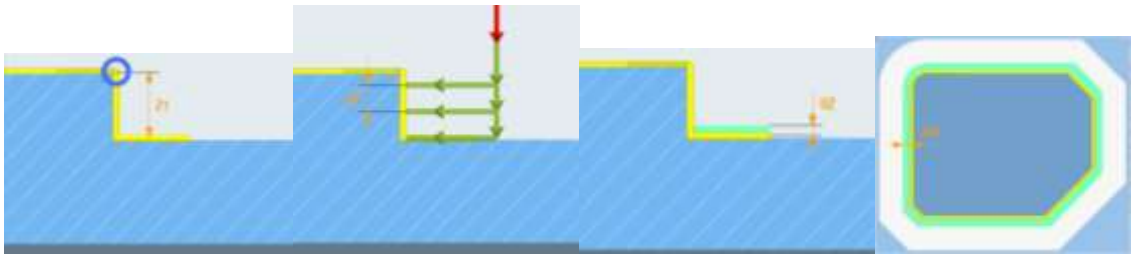

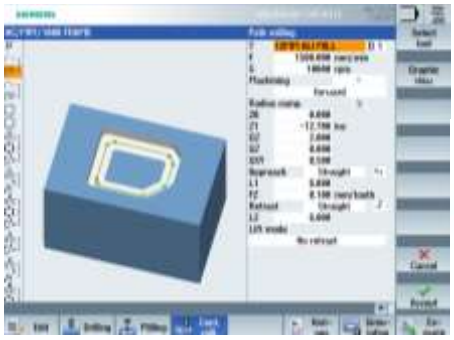

Repeat for the opposite edge.

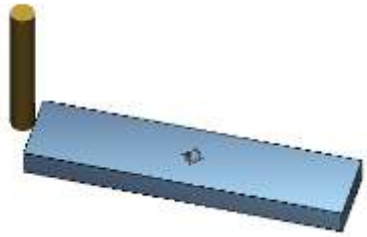

The program is shown:

P	Program header	G54 Block
	Contour	RIGHT
	Path milling	T=12MM ALI MILL F=1500/min S=10000rev Z0=0
	Contour	LEFT
	Path milling	T=12MM ALI MILL F=1500/min S=10000rev Z0=0

Click

.

Click

.

Set, as defined:

Input		Complete
T	12MM ALI MILL	D 1
F	1500.000	mm/min
S	10000	rpm
Machining		
	Centric	
	Single position	
X0	-32.500	
Y0	0.000	
Z0	0.000	
⌀	14.000	
Z1	-12.700	inc
DXY	0.500	mm
DZ	2.000	
UXY	0.010	
UZ	0.010	
Insertion		Vertical
FZ	0.100	mm/tooth
Removing		Comp. machining

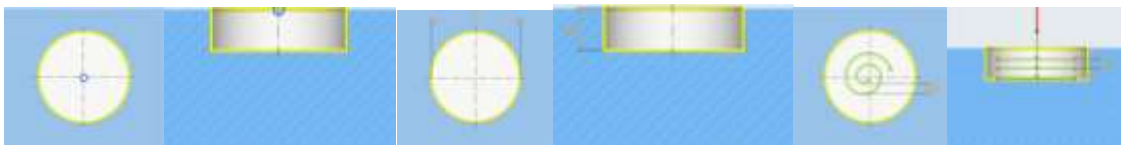

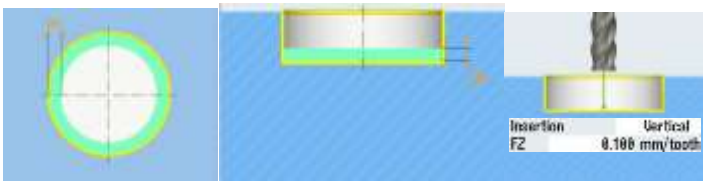

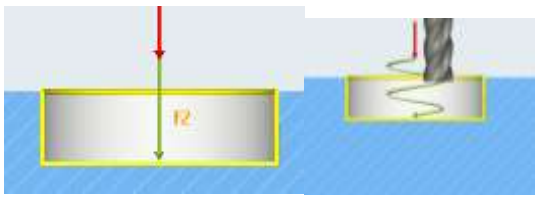

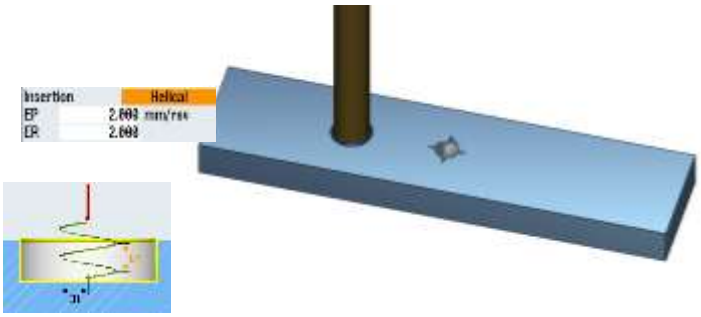

- X0/Y0/Z0 – Reference point.
- Theta – Circle diameter.
- Z1 – Total depth.
- DXY - Maximum plane infeed per step
- DZ – Maximum depth infeed per step.
- UXYZ – Finishing tolerance XYZ.
- Insertion – Modes as shown.
- EP/ER/FZ – Step spacing as shown.

Cut next pocket and set:

Input		Complete
T	12MM ALI MILL	D 1
F	1500.000	mm/min
S	10000	rpm
Machining		WAll
	Centric	
	Single position	
X0	-32.500	
Y0	0.000	
Z0	0.000	
⌀	20.000	
Z1	-12.700	inc
DZ	2.000	
UXY	0.100	

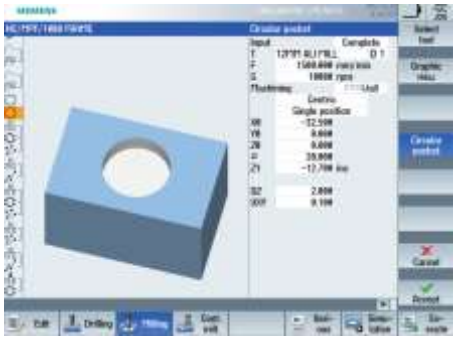

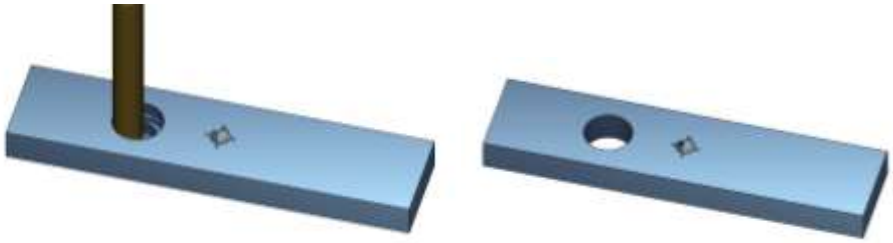

Click

.

Click

.

Set as defined:

T	16MM SPOT DRILL	D 1
F	500.000 mm/min	
S	5000 rpm	
	Diameter	
⌀	4.300	
DT	0.600 s	

- DT – Dwell time at final depth.

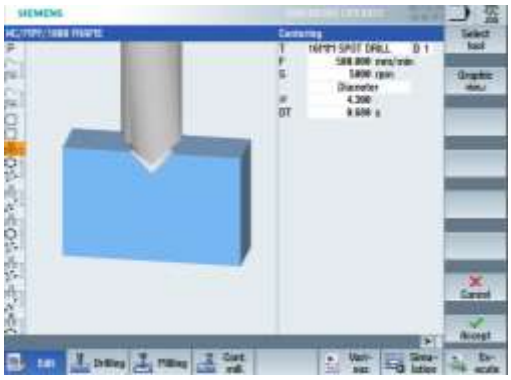

Positioning flange mounts.

Click

.

Click
.

Set as defined:

Z0	0.000	
X0	-32.500	
Y0	0.000	
α0	0.000	°
R	16.000	
N	3	
positioning		Circle

- a0 – Starting angle for first position.
- R – Radius.
- N – Number of positions.
- Positioning – Movement between positions (Straight/Circle).

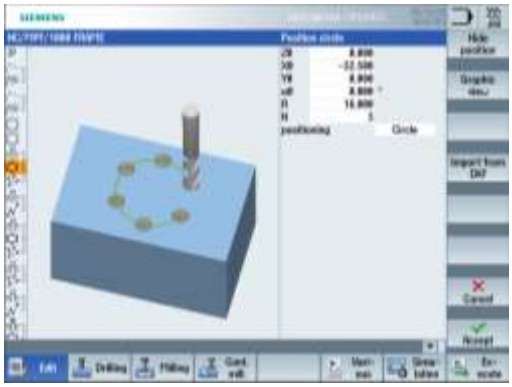

Click .

Set as defined:

	Polar	
Z0	0.000	
XP	37.500	abs
YP	0.000	abs
L0	20.000	abs
α0	13.000	abs
L1	20.000	abs
α1	-13.000	abs

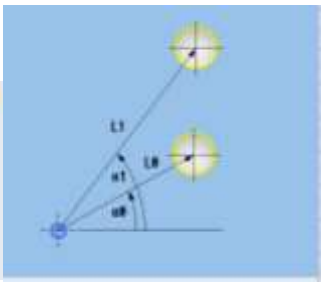

- XP/YP – Position.

Click

.

Click

.

Set:

T	16MM SPOT DRILL	D 1
F	500.000 mm/min	
S	5000 rpm	
	Diameter	
⌀	8.100	
DT	0.600 s	

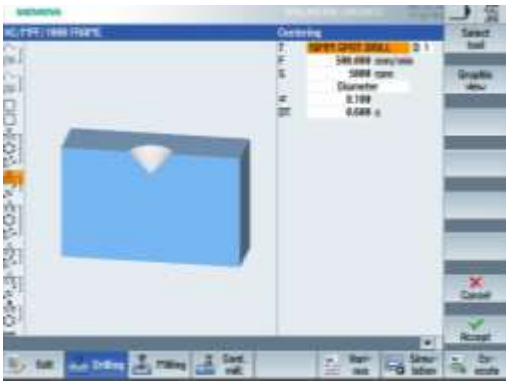

Click
.

Set:

	Rectangular
Z0	0.000
X0	37.500 abs
Y0	0.000 abs

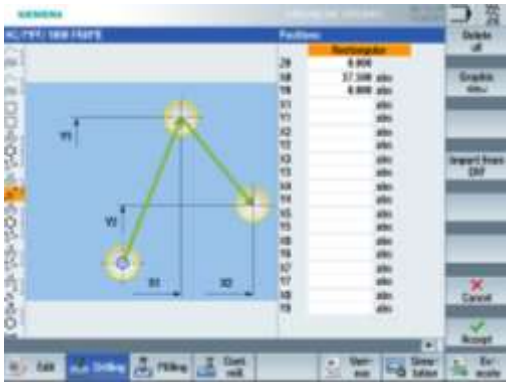

The program is shown.

Centering	T=16MM SPOT DRILL F=500/min S=5000rev ⌀4.3
001: Posit. circle	Z0=0 X0=-32.5 Y0=0 R=16 N=3
002: Positions	Z0=0 XP=37.5 YP=0 L0=20 α0=13 L1=20 α1=-13
Centering	T=16MM SPOT DRILL F=500/min S=5000rev ⌀8.1
003: Positions	Z0=0 X0=37.5 Y0=0

Click

.

Click 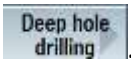

.

Click

.

Set the following, defined above and below:

Input	Complete
T	4.2MM ALI DRILL D 1
F	650.000 mm/min
S	7500 rpm
	Chipbreaking
	Shank
Z1	-12.700 inc
FD1	90.000 %
D	5.000
DF	90.000 %
V1	1.200
V2	1.400
DT	0.500 s

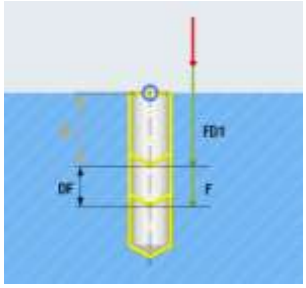

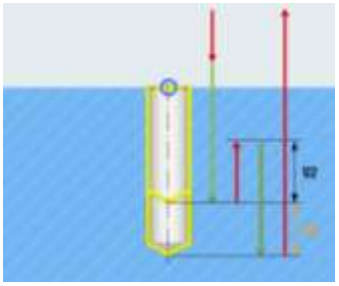

- Z1 – Final depth
- FD1 – First infeed percentage
- D – Max infeed depth (each step)
- DF – Percentage for every further infeed.
- V1 – Minimum infeed depth
- V2 – Retraction after machining.

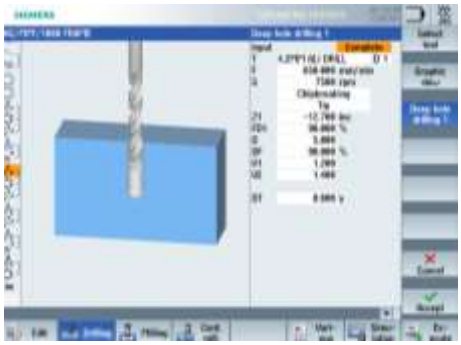

Copy the lines:

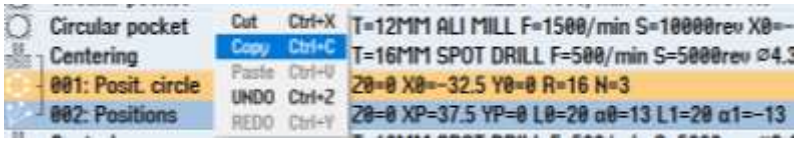

Paste, removing a0=13.

Deep hole drill.1	T=4.2MM ALI DRILL F=650/min S=7500rev Z1=-12.7inc
004: Posit. circle	Z0=0 X0=-32.5 Y0=0 R=16 N=3
005: Positions	Z0=0 XP=37.5 YP=0 L0=20 a0=-13

Set Deep hole drilling 1 using the Z1 value and make a0=13.

Deep hole drill.1	T=4.2MM ALI DRILL F=650/min S=7500rev Z1=-10.7inc
006: Positions	Z0=0 XP=37.5 YP=0 L0=20 a0=13

Set Deep hole drilling 1 using the values:

Input	Complete
T	8MM ALI DRILL D 1
F	400.000 mm/min
S	3500 rpm
	Chipbreaking
	Shank
Z1	-16.000 inc
FD1	90.000 %
D	5.000
DF	90.000 %
V1	1.200
V2	1.400
DT	0.600 s

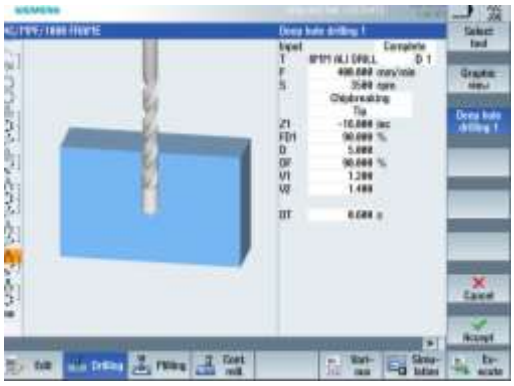

The program is shown:

Deep hole drill.1	T=8MM ALI DRILL F=400/min S=3500rev Z1=-16inc
007: Positions	Z0=0 X0=37.5 Y0=0

Click

.

Click

.

Set:

T	M5 ALI TAP	D 1
Table	ISO metric	
Select	M 5	
P	0.800 mm/rev	
S	300 rpm	
SR	5 rpm	
	W/o compensat. chuck	
	1 cut	
Z1	-12.700 inc	

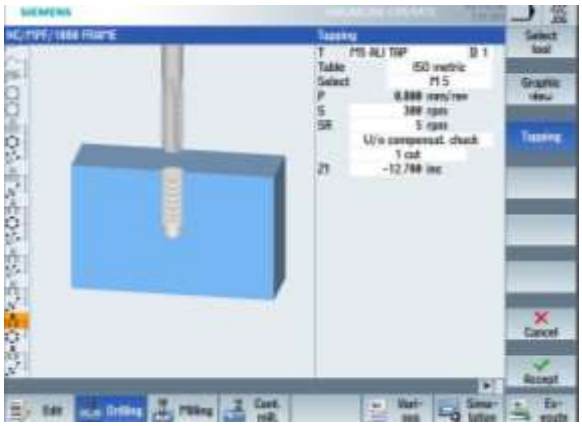

Copy the line.

Paste as shown:

Repeat and set:

T	M8 ALI TAP	D 1
Table	ISO metric	
Select	M 8	
P	1.250 mm/rev	
S	450 rpm	
	With compensat. chuck	
Z1	-20.000 abs	

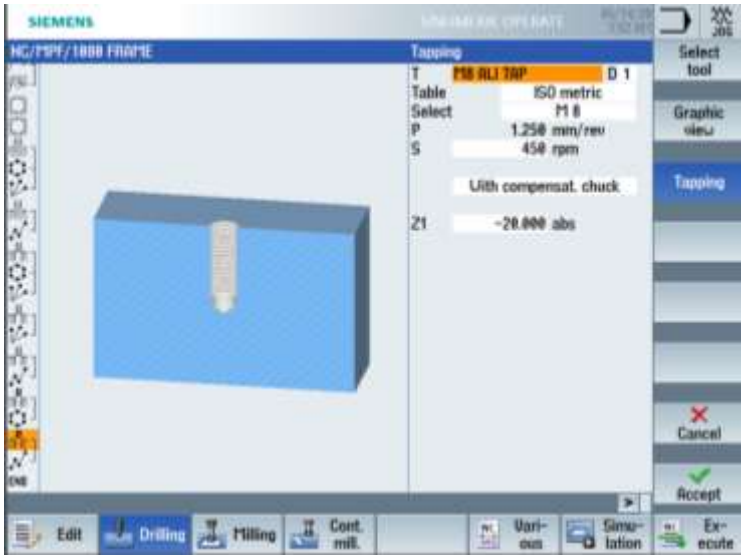

Copy the line.

002: Positions	Z0=0 XP=37.5 YP=0 L0=20 α0=13 L1=20 α1=-13
Centering	T=16MM SPOT DRILL F=500/min S=5000rev ⌀8.1
003: Positions	Z0=0 X0=37.5 Y0=0
Deep hole drill.1	T=4.2MM ALI DRILL F=650/min S=7500rev Z1=-12.7inc
004: Posit. circle	Z0=0 X0=-32.5 Y0=0 R=16 N=3

Paste as shown:

Tapping	T=M8 ALI TAP M8 S=450rev Z1=-20
009: Positions	Z0=0 X0=37.5 Y0=0

Activate shower coolant (M80) to rinse the workpiece.

G M80¶	
END End of program	0

Left

Press .

Click Part programs DIR 05/05/20 3:32:55 PM.

Click New .

Click ShopMill .

Name program.

Meas. un.	mm
Work offset	G54
Blank	Block
X0	-6.350
Y0	-19.050
X1	12.700 inc
Y1	38.100 inc
Z0	0.000
Z1	-160.000 abs
PL	G17 (XY)
Retraction plane	
RP	300.000
Safety distance	
SC	1.000
Machining sense	
	Up-cut
Retract position pattern	
	Optimized

Set the G54 values or swivel plane:

Set the Centering, Deep Hole Drill 1 and Tapping functions shown.

T	16MM SPOT DRILL	D 1
F	500.000 mm/min	
S	5000 rpm	
	Diameter	
⌀	8.100	
DT	0.600 s	

Input	Complete	
T	6.8MM ALI DRILL	D 1
F	650.000 mm/min	
S	4500 rpm	
	Chipbreaking	
	Tip	
Z1	-23.000 abs	
FD1	90.000 %	
D	5.000	
DF	90.000 %	
V1	1.200	
V2	1.400	
DT	0.600 s	

T	M8 ALI TAP	D 1
Table	ISO metric	
Select	M 8	
P	1.250 mm/rev	
S	450 rpm	
	With compensat. chuck	
Z1	-20.000 abs	

Click .

Set:

Z0	0.000
X0	0.000
Y0	-10.000
α0	90.000 °
L0	0.000
L	20.000
N	2

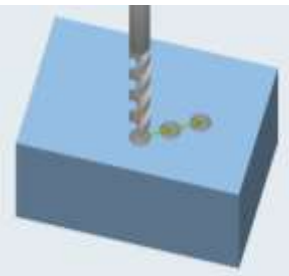

The program is shown.

Right

Press .

Click

.

Click 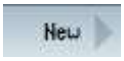

.

Click

.

Name program.

Set G54 block in the opposite direction.

Set the Centering, Deep Hole Drill 1 and Tapping functions shown.

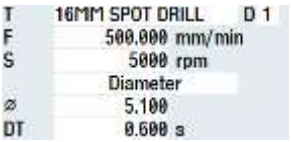

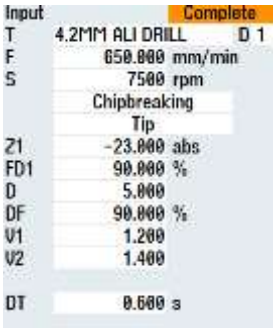

The program is shown.

Run the simulation.

Click

.

Control the program using .

Start before running the cycle.

End.

Ahsan Ramzan individual contribution – Piston Con Rod.

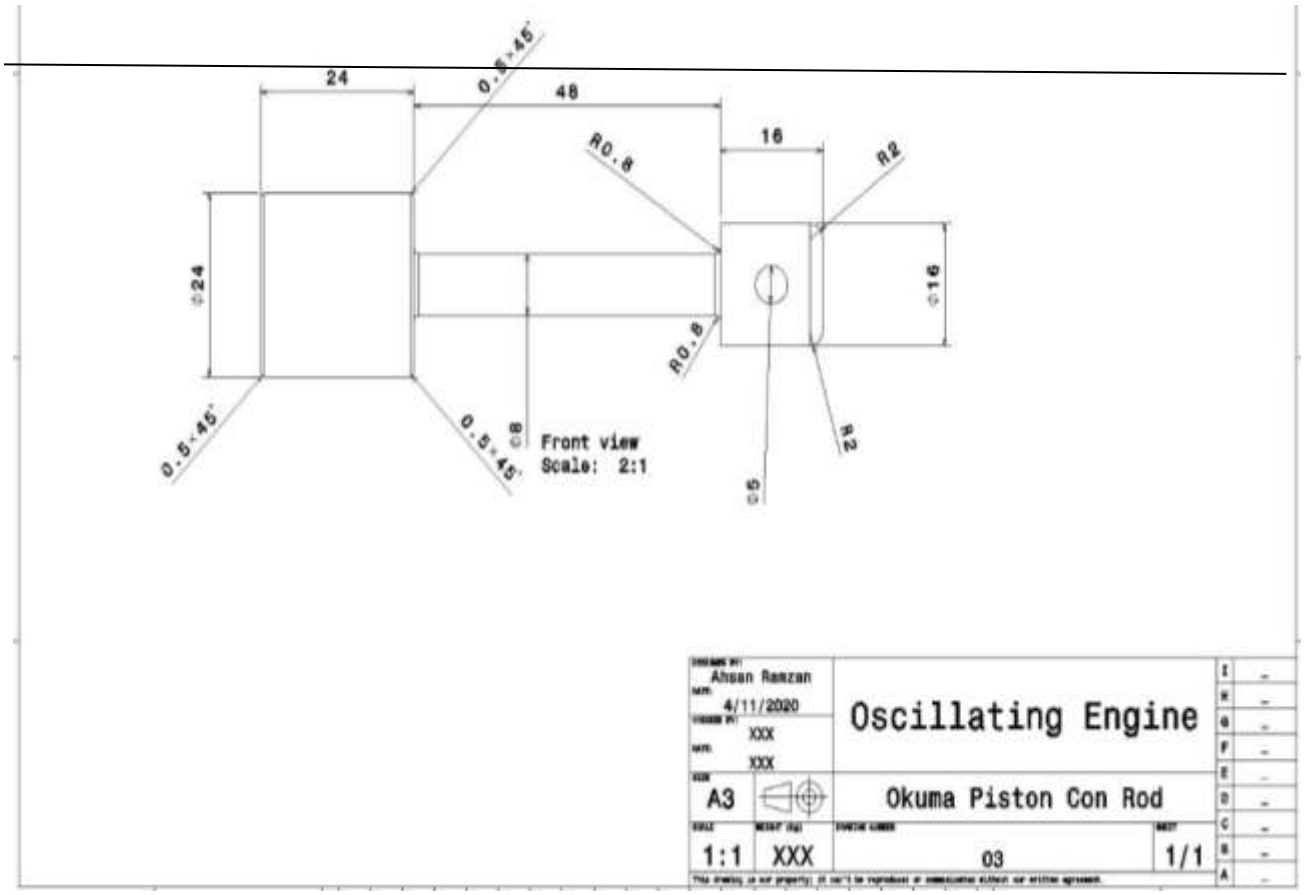

Engineering Drawing:

This is the engineering drawing of okuma piston con rod of the oscillating engine. It has four chamfers (0.5*45°)on the left side of big circle and a threaded hole on right hand side with diameter 5mm and depth 16mm. The maximum diameter in this shape is 24mm. The material is given in the form of circular cylinder in which the first task is face roughing.

In the CNC Lathes machine the work piece doesn't move but actually the tool is moving during whole task of roughing. The movement of the axis in CNC Lathes is given below:

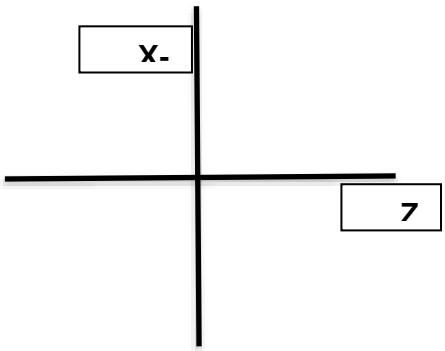

- Moving left (towards spindle) Z-ve
- Moving right (away from spindle) Z+ve
- Moving above spindle centre line X+ve
- Moving below spindle centre line X–ve
- Note X is always DIAMETER

Program:

G71 (Stock removal in turning) Axis Roughing Cycle & G70(Finishing cycle) Axis Finishing cycle

To do this task of okuma piston rod in Okuma and Howa machine we assumed following numbers for face roughing and finishing tools.

Assumptions set:

Depth of Cut= 2mm

Return Amount =1mm

X Axis Finish Allowance=0.5mm

Z Axis Finish Allowance =0.1mm

mm/rev Rough Feed Rate =0.1 mm/rev

Finishing Feed Rate=0.05mm/rev

The datum of the machine is stay at the right middle of the circle and to get roughing the required amount of material G71 code is used with following set of code given below:

```
G00 X27 Z1.0
G71 U 2.0 R 1.0
G71 P100 Q200 U 2.0 W 0.1 F.15
N100 G0 X12.
N110 G03 X16.Z-2.R-2
N120 G01 Z-64
N130 G01 X23
N140 G01 Z-64.5X24
N150 G01 Z-93
N160 G01 Z-93. X26.4
N160 G70 P100 Q160
```

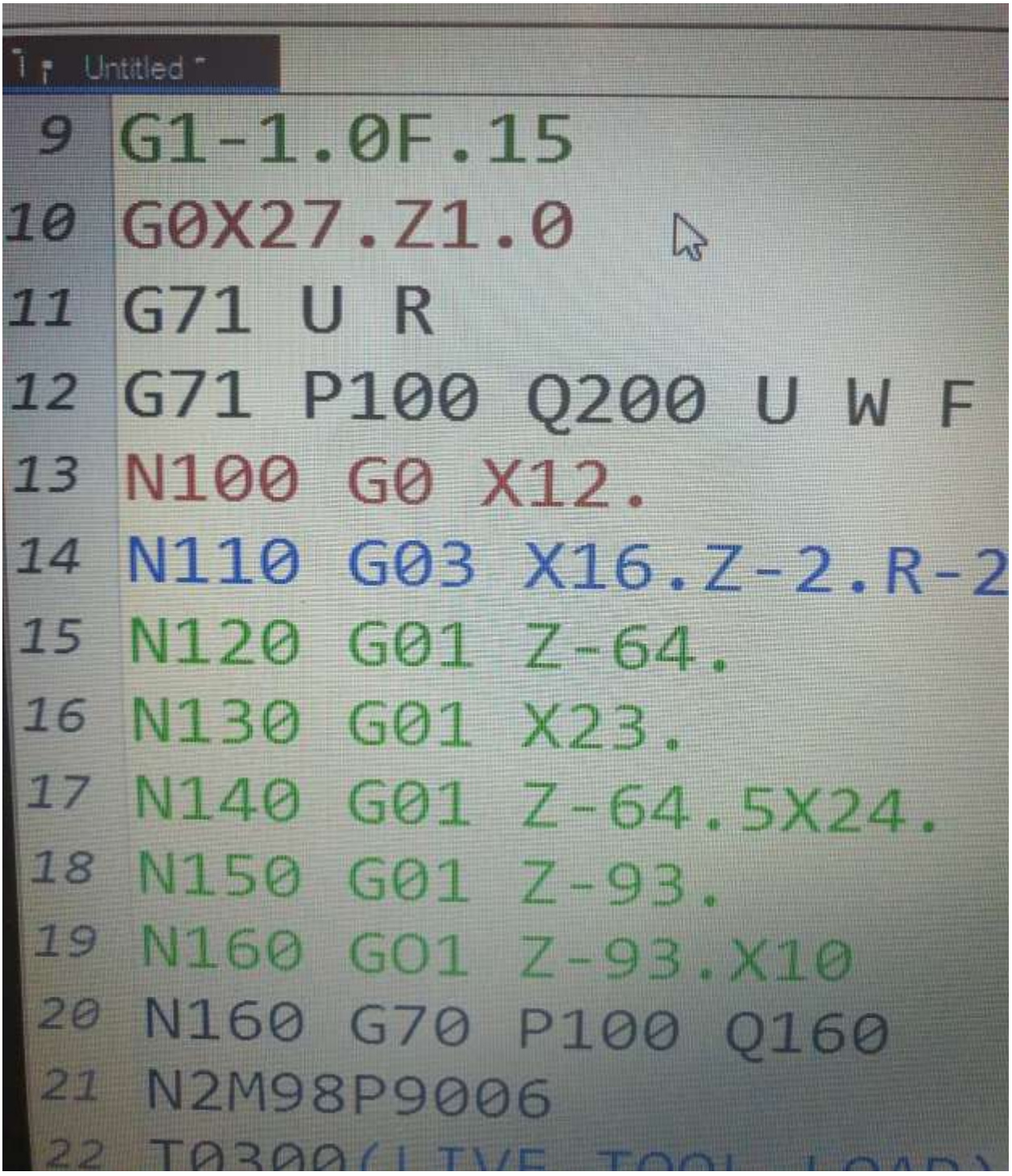

```
Untitled
G1-1.0F.15
G0X27.Z1.0
G71 U R
G71 P100 Q200 U W F
N100 G0 X12.
N110 G03 X16.Z-2.R-2
N120 G01 Z-64.
N130 G01 X23.
N140 G01 Z-64.5X24.
N150 G01 Z-93.
N160 G01 Z-93.X10
N160 G70 P100 Q160
N2M98P9006
T0300(LIVE TOOL LOAD)
```

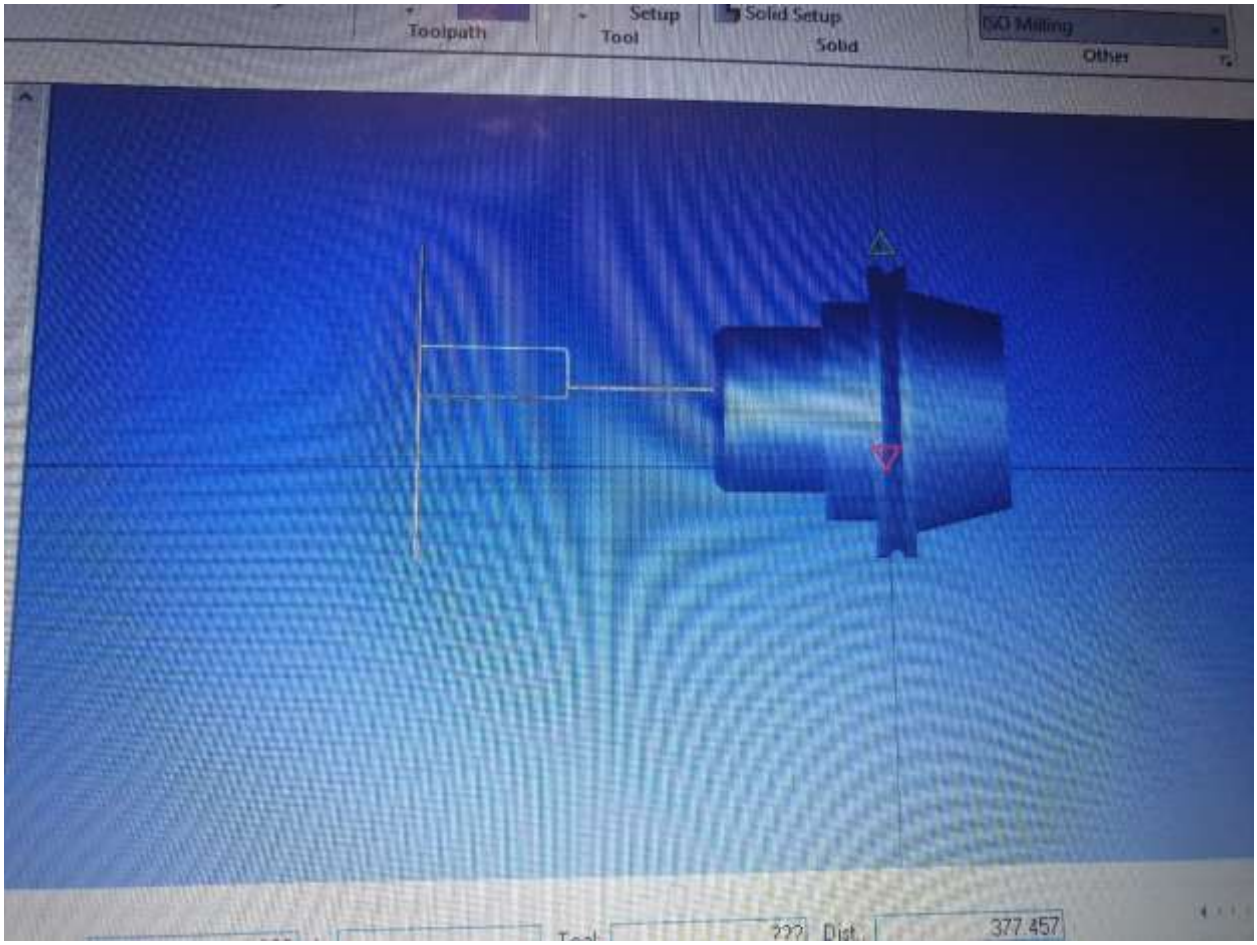

The first part roughing of material is complete here in which Radius of curvature is 2mm and the depth of each cut is 2mm.The roughing part finishes at P100 and Q160 with finishing code of G70. The spindle speed of the tool of machine is 3000rpm(revolution per minute) in above case.

For middle subprogram we have following pre-determined values given below:

- The tool is 4mm wide
- U-is X-incremental move
- 1mm depth of cut
- 1mm return value

Now it's the undercut subprogram for roughing of material with length 48mm in z-direction with the tool is 16mm away from datum in z-axis. Here the tool is 4mm wide and depth of cut is 1mm.

In this case the tool starts 2mm away from surface of the material and so the value in x-axis is 18mm as shown in figure. Also the tool is 4mm wide in z-direction and so the total distance from datum in z-axis is 20mm (Z-20). The spindle speed in this undercut subprogram is 1750rpm. Here M codes are used for spindle clamp to turn it on and off. M68 code is used for on position and M69 is used for Off position.

```
G97S1750M04
G00Z-20.T0808
G0G99X18.M8
M98P21 L4
G0X26.
N4M98P9006
T1200M8
G97S800M3
G0Z-91.T1212M8
G0X26.M86
G1X23.M86
G0X26.
G0Z-90.
G1X24.
G1X23.Z-91.
```

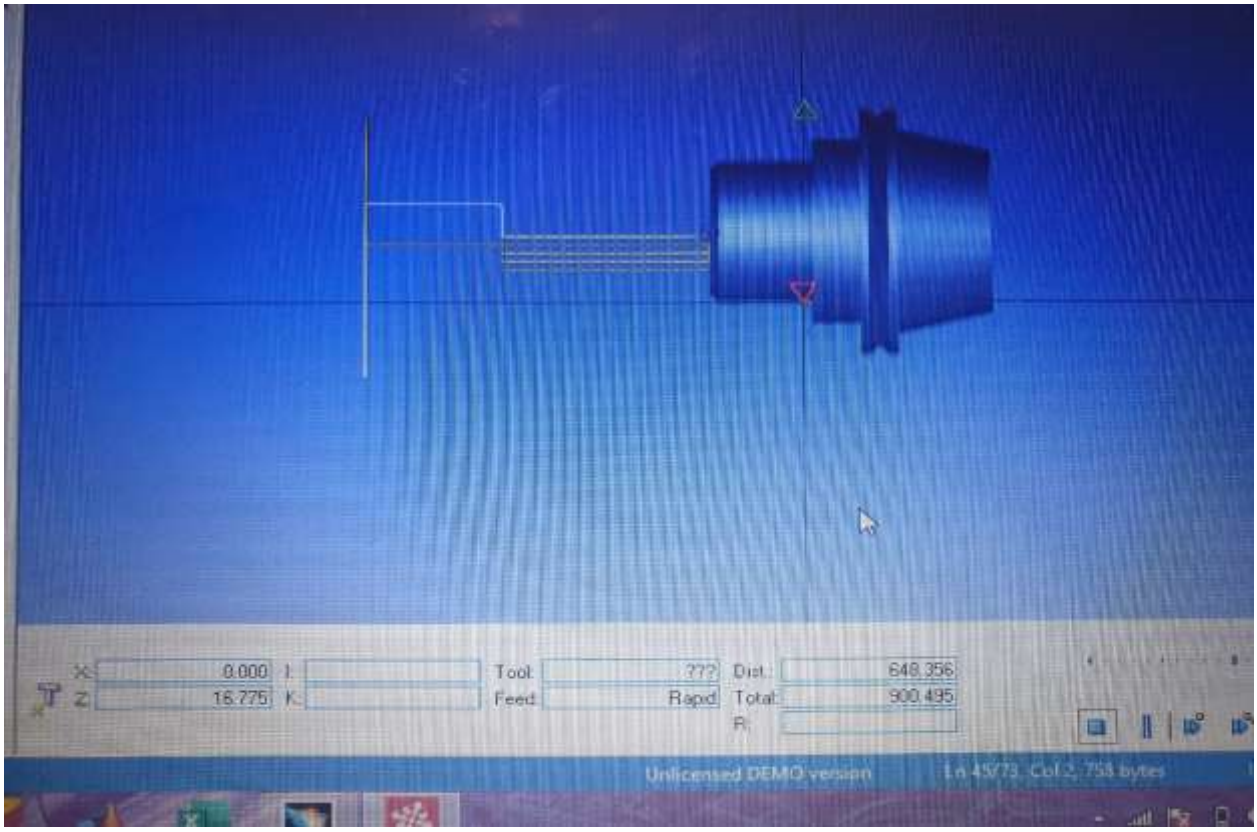

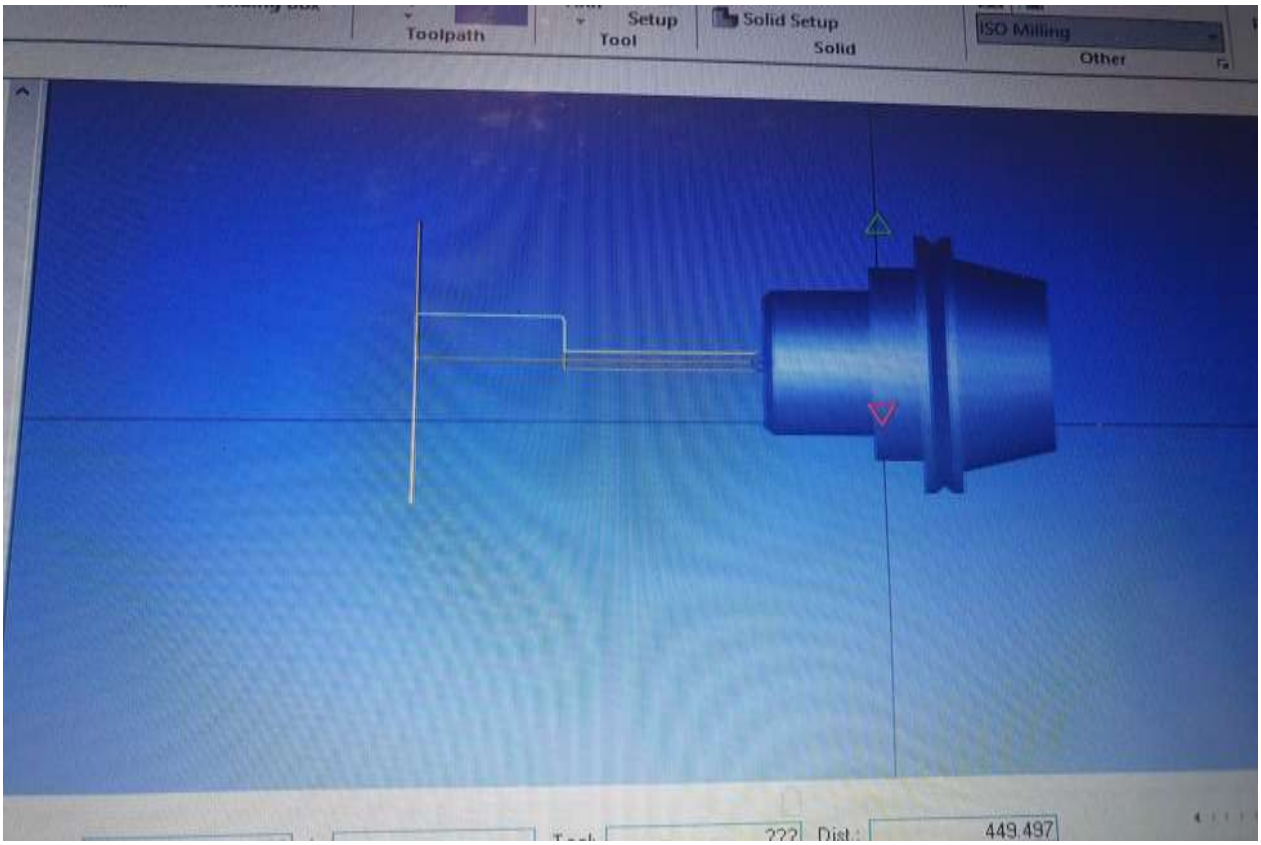

The four chamfers on the left circles is done by using tool T1200 with spindle speed 800rpm and feed rate of 0.025mm/min. The four chamfers location within the machine is shown in the pics as each chamfer has 0.5mm length.

```
47  T1200M8
48  G97S800M3
49  G0Z-91.T1212M8
50  G0X26.M86
51  G1X23.M86
52  G0X26.
53  G0Z-90.
54  G1X24.
55  G1X23.Z-91.
56  G1X-1.
57  G0X45.
58  M87
59  G0Z0.5M9
60  M30
61  %
```

The drilling of 5mm hole on a 16mm circular depth on right side is done by using tool T0303 with a spindle speed of 2000rpm and feed rate ranging from 75 to 400 as at the start is 75 and in middle of depth is 400 and then back to 400mm/min at the complete depth of circle.

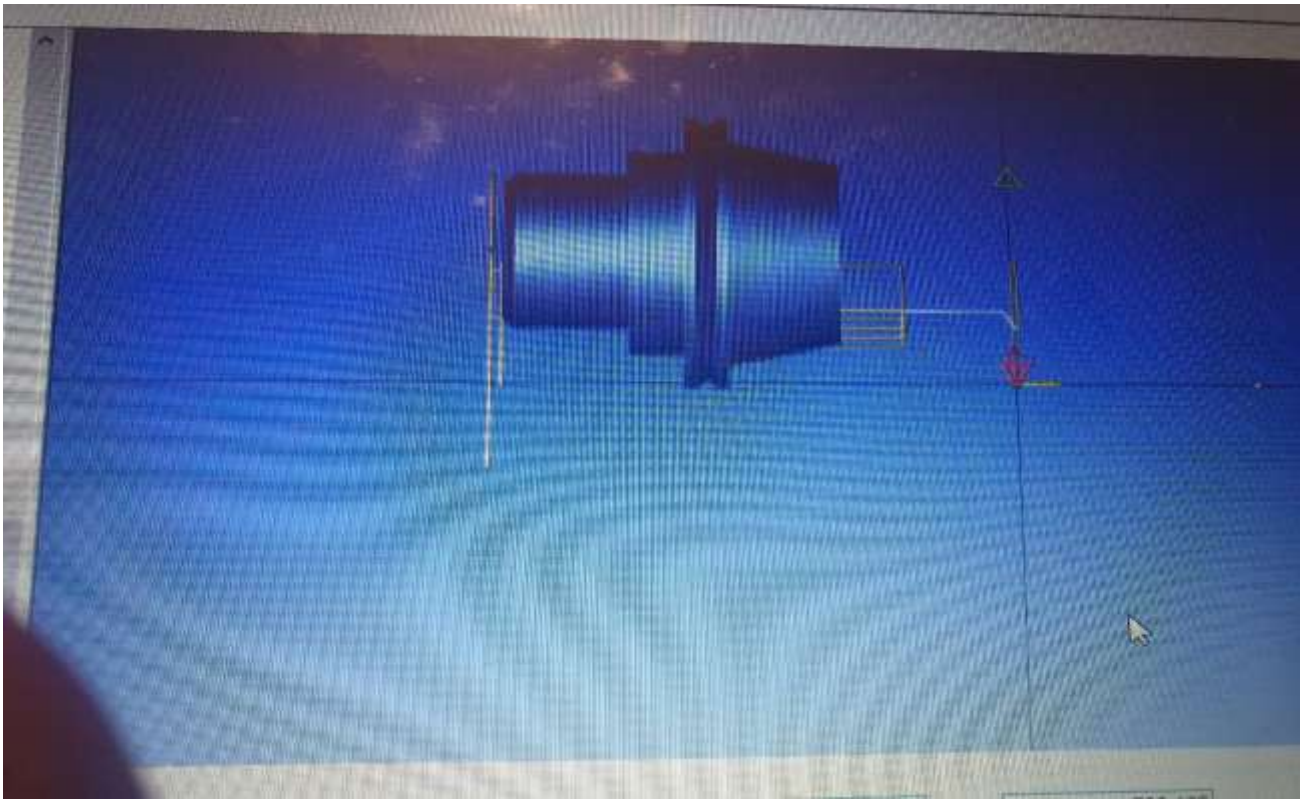

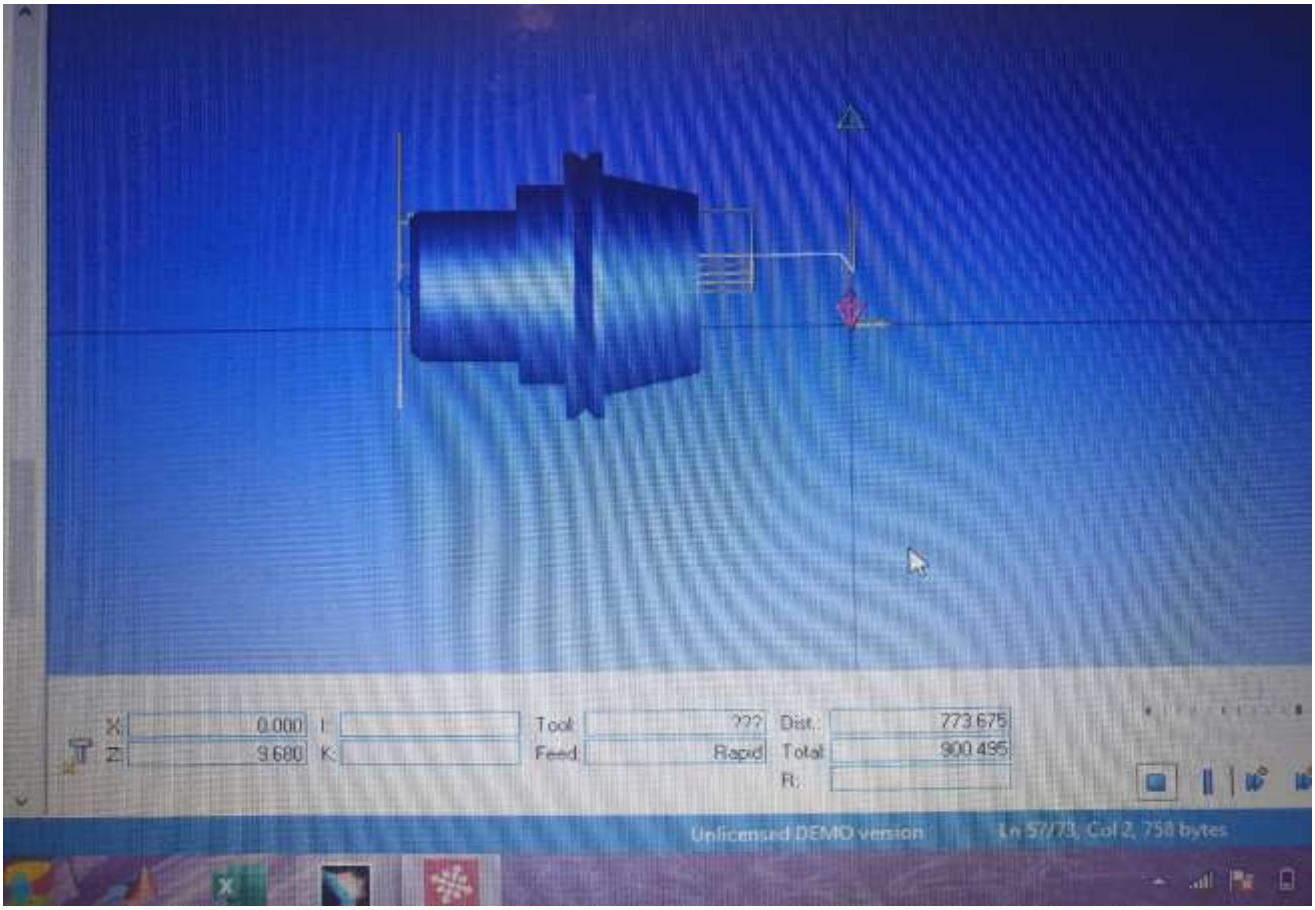
X: 0.000
Z: 9.680
I:
K:
Tool: ???
Feed: Rapid
Dist.: 773.675
Total: 900.495
R:
Unlicensed DEMO version
Ln 57/73, Col 2, 758 bytes

Final Product:

Final Product in Simulation:

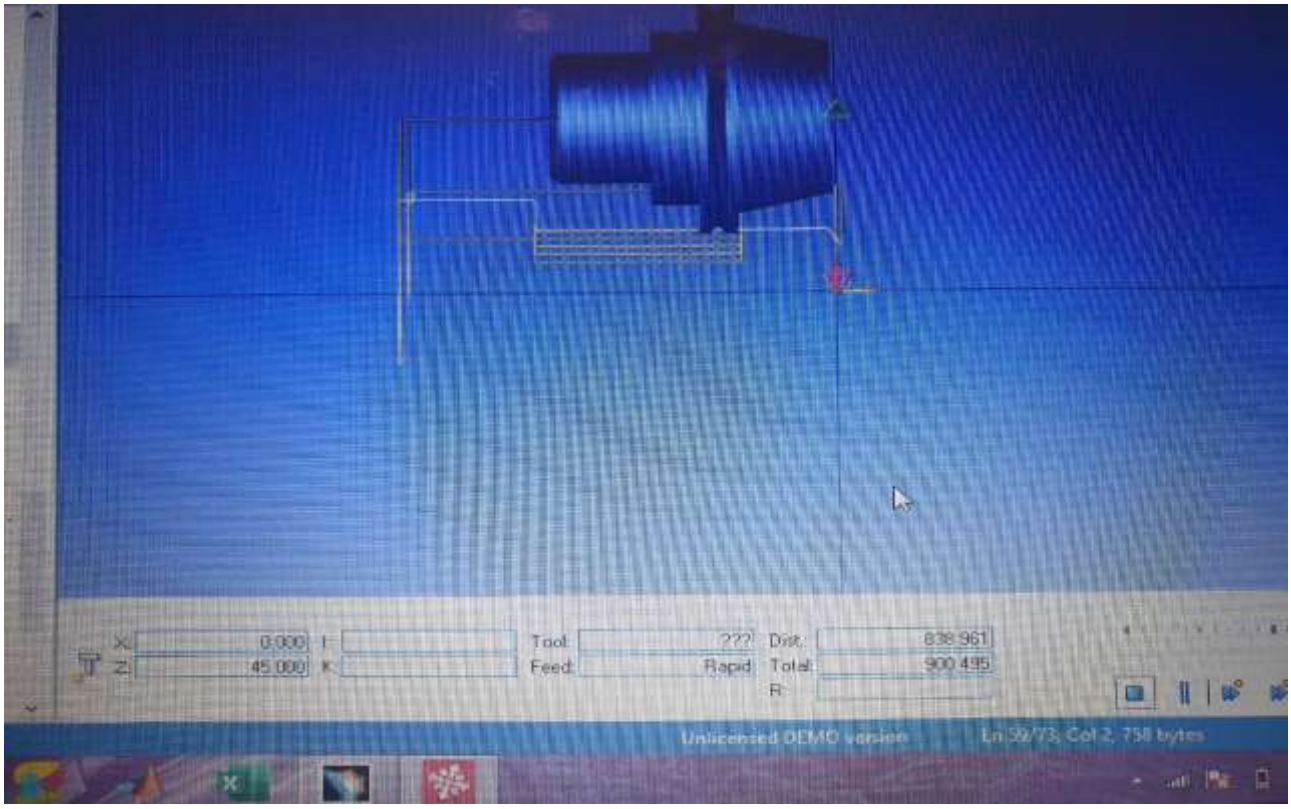

Imran Siddique Individual contribution – SMX 3500 crankshaft.

PROTOTRAK SMX 3500

Preview:

SMX 3500 is a CNC milling and drilling machine. It is must have piece of machine. CNC mean a computer numerical control. Around 1950 to 1960 companies start using these machines. It is a XYZ milling machine. Reduce workload, time and effort. Control by using different codes, each code has a purpose also can be controlled manually. Various size of Tools can be used, and speed of the tolls can be set according to object which working on it. Tolls can rotate 360 degree. Lengths are measured in mm. when it comes to drilling (z direction) # passes and depth can be set according to its demand.

Purpose of a crank shaft in engine:

The *crankshaft* is an engine component that converts the linear (reciprocating) motion of the piston into rotary motion. The crankshaft is the main rotating component of an engine and is commonly made of ductile iron. Features of a crankshaft include the crankpin journal, throw, bearing journals, counterweights, crank-gear, and a power take-off (PTO). A *crankpin journal* is a precision ground surface that provides a rotating pivot point to attach the connecting rod to the crankshaft. The *throw* is the measurement from the centre of the crankshaft to the centre of the crankpin journal, which is

used to determine the stroke of an engine. The throw is equal to one-half the stroke. The longer the throw, the greater the stroke, or distance, a piston travel (Crankshaft, 2020).

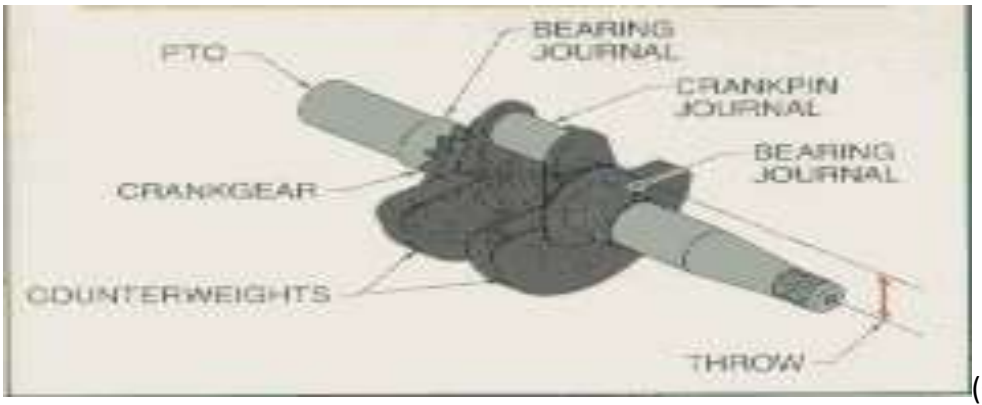

(Crankshaft, 2020).

MATERIAL SHAP AND SIZE.

A CICRCULER CYLINDER

<u>BEFORE (A)</u>

<u>AFTER (B)</u>

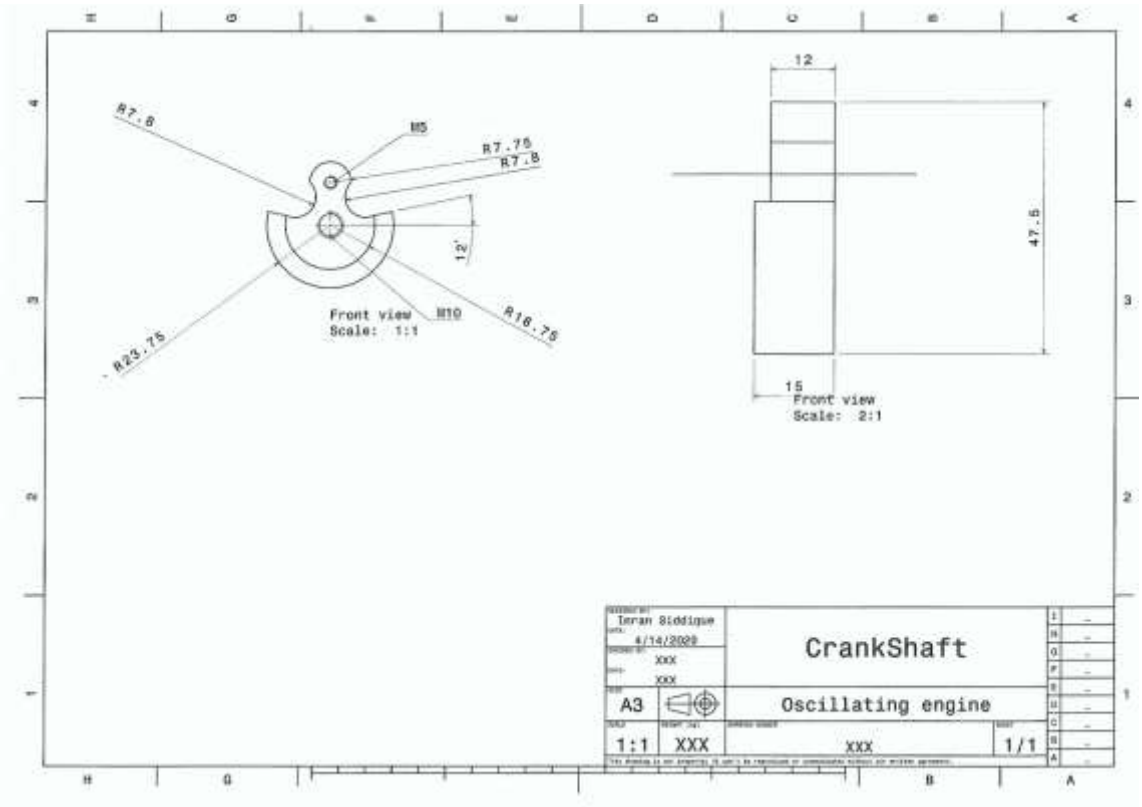

CODES USED FOR MILLING AND DRILLING

MILLING AND DRILLING CODES

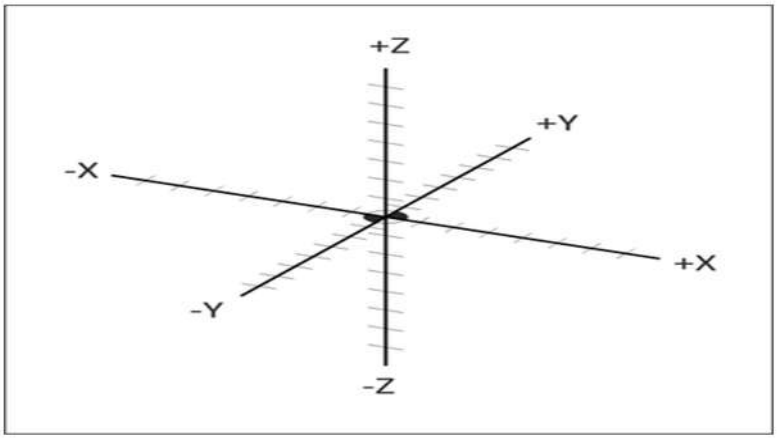

(2020).

Three-dimensional movement

X (+ or -) direction (left or right movement)

Y direction in or out

Z direction is a spindle movement (moving downwards is negative – upward is positive)

- Absolute (abs) stand for stand for

EVENT 1 FACE MILL

PROG P/N 0 ABS

X1	-30.000 abs
Y1	15.000 abs
X3	30.000 abs
Y3	-15.000 abs
Z RAPID	1.000 abs
Z END	-5.000 abs
# PASSES	5
Z FIN CUT	0.000
RPM	2000.00
Z FEEDRATE	200
XYZ FEEDRATE	400
TOOL #	1

EVENT 2 DRILL

PROG P/N 0 ABS

X	0.000 abs
Y	0.000 abs
Z RAPID	5 abs
Z END	-8.000 abs
# PEKS FOR DRILL	1
RPM	2000.00
Z FEEDRATE	200
# TOOL	2

EVENT 3 DRILL

PROG P/N 0 ABS

X	-20.000 abs
Y	0.000 abs
Z RAPID	5 abs
Z END	-8.000 abs
# OF FIXED PECKS	1
RPM	2000.00
Z FEEDRATE	100
# TOOL	2

EVENT 4 DRILL

PROG P/N 0 ABS

X	-20.000 abs
Y	0.000 abs
Z RAPID	5 abs
Z END	-25.000 abs
# OF FIXED PECKS	5
RPM	2000.00
Z FEEDRATE	100
# TOOL	3

EVENT 5 DRILL

PROG P/N 0 ABS

X	0.000 abs
Y	0.000 abs
Z RAPID	5.000 abs
Z END	-25.000 abs
# OF FIXED PECKS	4

RPM	2000.00
Z FEEDRATE	200
# TOOL	4

EVENT 6 DRILL

PROG P/N 0 ABS

X	-20.000 abs
Y	0.000 abs
Z RAPID	5 abs
Z END	-13.000 abs
# OF FIXED PECKS	1.250
RPM	100.00
TOOL #	5

5 Results and Analysis

The results and analysis of the team's design work is shown below in the form of engineering drawings, kinematic analysis and fits and tolerances.

Engineering drawings

All drawings were constrained and produced successful drawings, which were dimensioned for future use.

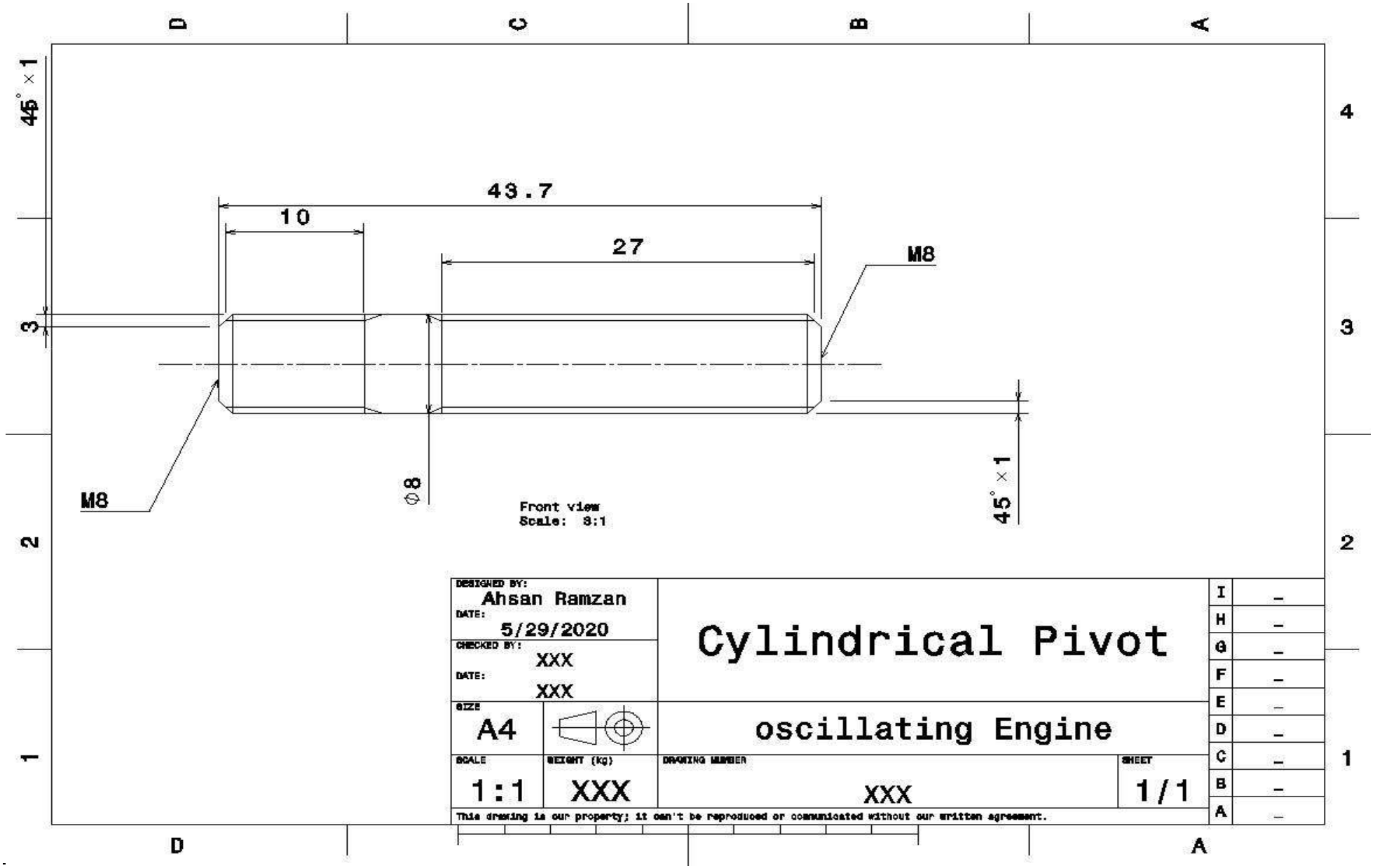
43.7
10
27
M8
M8
3
Φ8
45° × 1
45° × 1
Front view
Scale: 3:1
DESIGNED BY:
Ahsan Ramzan
DATE:
5/29/2020
CHECKED BY:
XXX
DATE:
XXX
SIZE
A4
Cylindrical Pivot
oscillating Engine
SCALE
1:1
WEIGHT (kg)
XXX
DRAWING NUMBER
XXX
SHEET
1/1
This drawing is our property; it can't be reproduced or communicated without our written agreement.

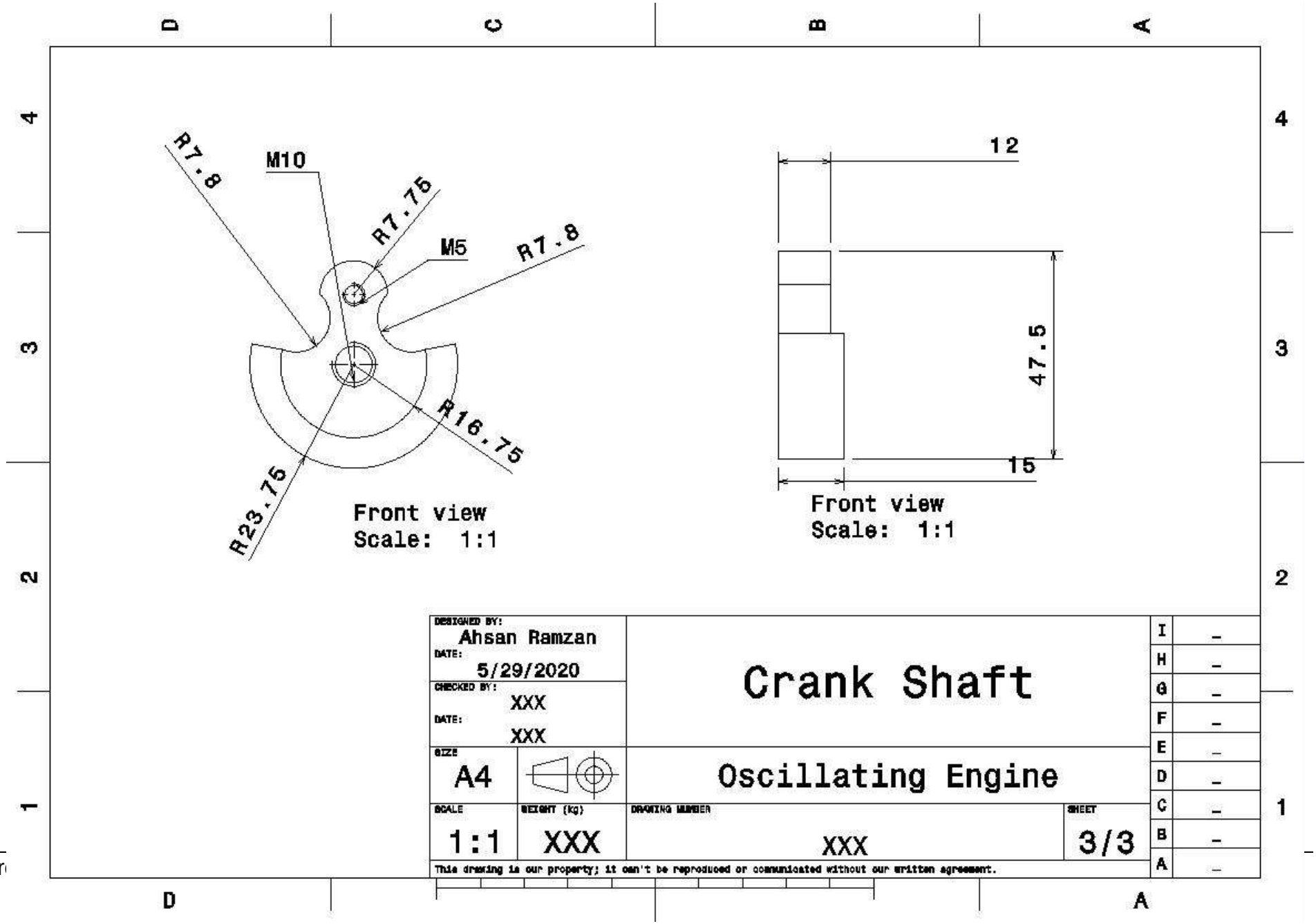
R7.8
M10
R7.75
M5
R7.8
R16.75
R23.75
Front view
Scale: 1:1
12
47.5
15
Front view
Scale: 1:1
DESIGNED BY:
Ahsan Ramzan
DATE:
5/29/2020
CHECKED BY:
XXX
DATE:
XXX
SIZE
A4
Crank Shaft
Oscillating Engine
SCALE
1:1
WEIGHT (kg)
XXX
DRAWING NUMBER
XXX
SHEET
3/3
This drawing is our property; it can't be reproduced or communicated without our written agreement.

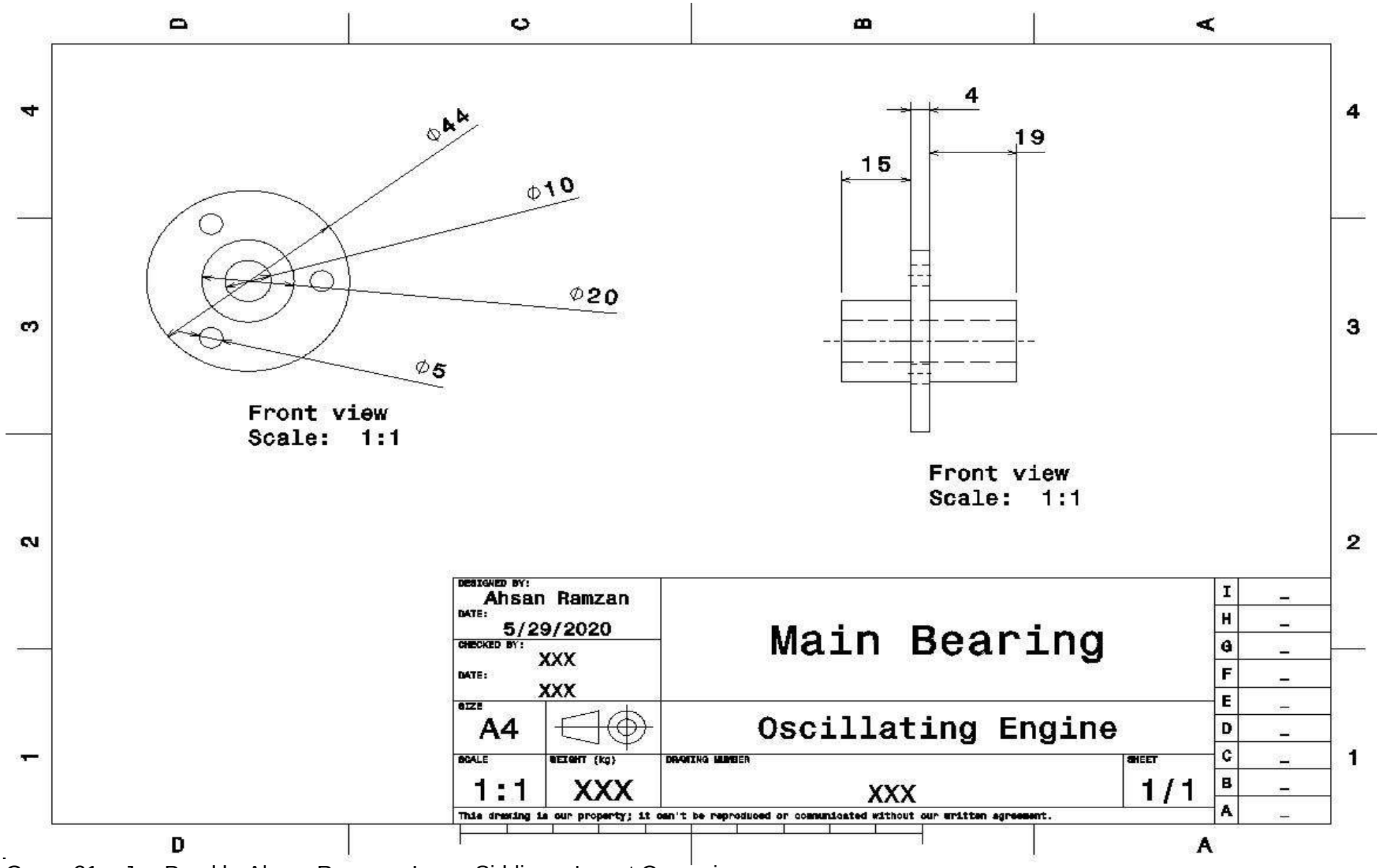
Ø44
Ø10
Ø20
Ø5
Front view
Scale: 1:1
4
19
15
Front view
Scale: 1:1
DESIGNED BY:
Ahsan Ramzan
DATE:
5/29/2020
CHECKED BY:
XXX
DATE:
XXX
SIZE
A4
Main Bearing
Oscillating Engine
SCALE
1:1
WEIGHT (kg)
XXX
DRAWING NUMBER
XXX
SHEET
1/1
This drawing is our property; it can't be reproduced or communicated without our written agreement.

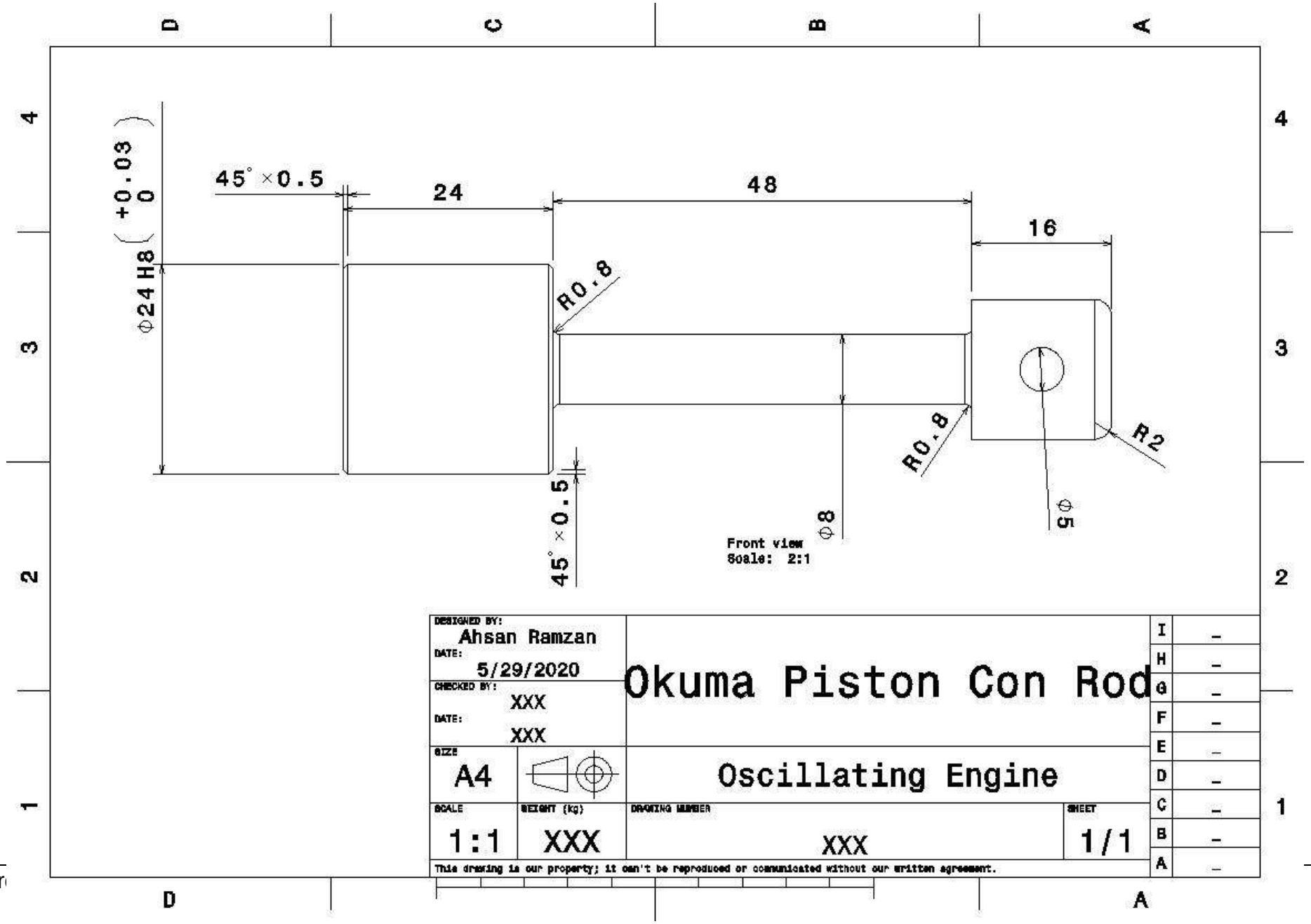
45° ×0.5
24
48
16
Φ24 H8 (+0.03 0)
R0.8
R0.8
R2
45° ×0.5
Φ8
Φ5
Front view
Scale: 2:1
DESIGNED BY:
Ahsan Ramzan
DATE:
5/29/2020
CHECKED BY:
XXX
DATE:
XXX
Okuma Piston Con Rod
SIZE
A4
Oscillating Engine
SCALE
1:1
WEIGHT (kg)
XXX
DRAWING NUMBER
XXX
SHEET
1/1
This drawing is our property; it can't be reproduced or communicated without our written agreement.

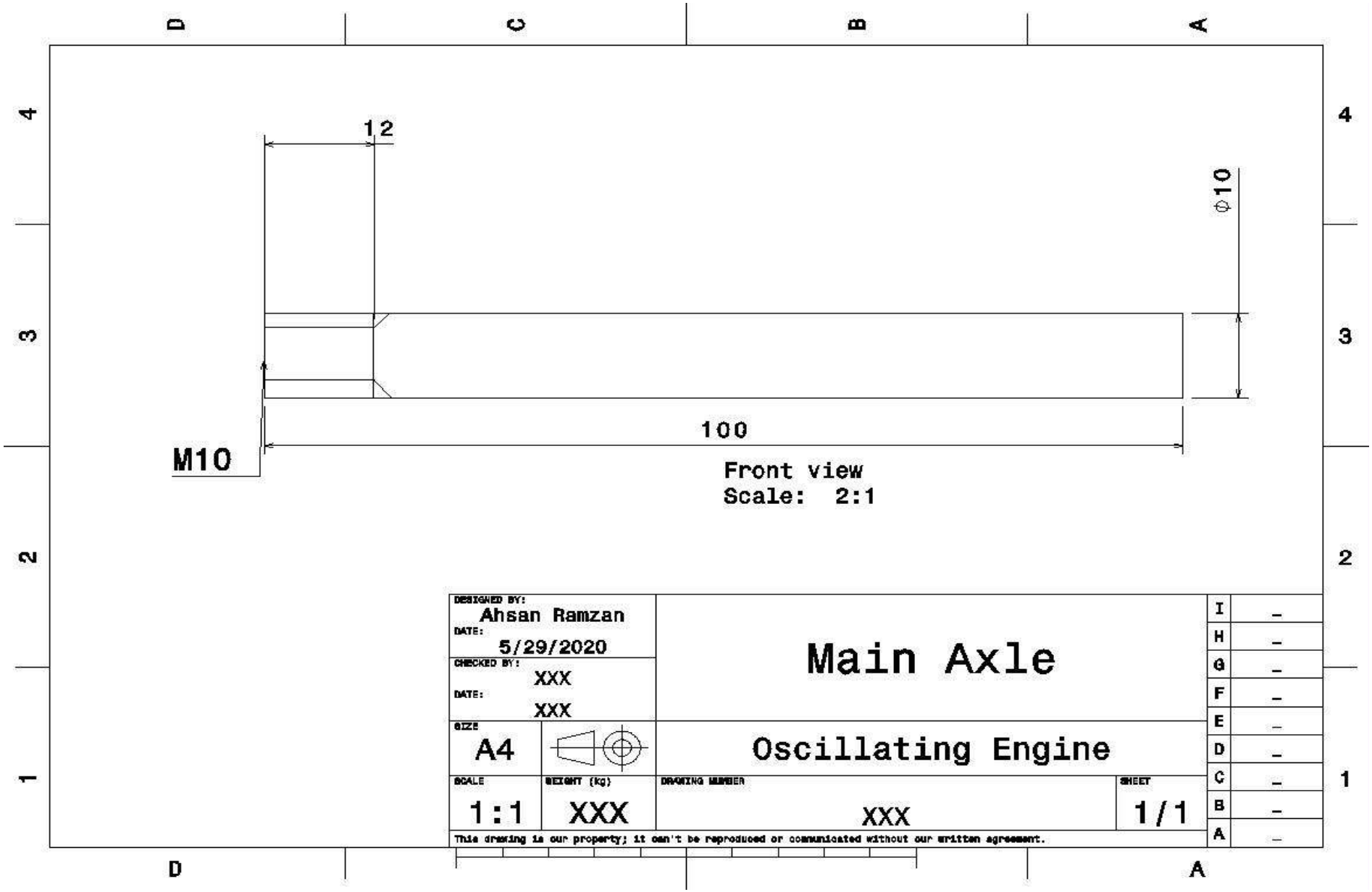
12
Φ10
100
M10
Front view
Scale: 2:1
DESIGNED BY:
Ahsan Ramzan
DATE:
5/29/2020
CHECKED BY:
XXX
DATE:
XXX
SIZE
A4
SCALE
1:1
WEIGHT (kg)
XXX
DRAWING NUMBER
XXX
SHEET
1/1
Main Axle
Oscillating Engine
This drawing is our property; it can't be reproduced or communicated without our written agreement.

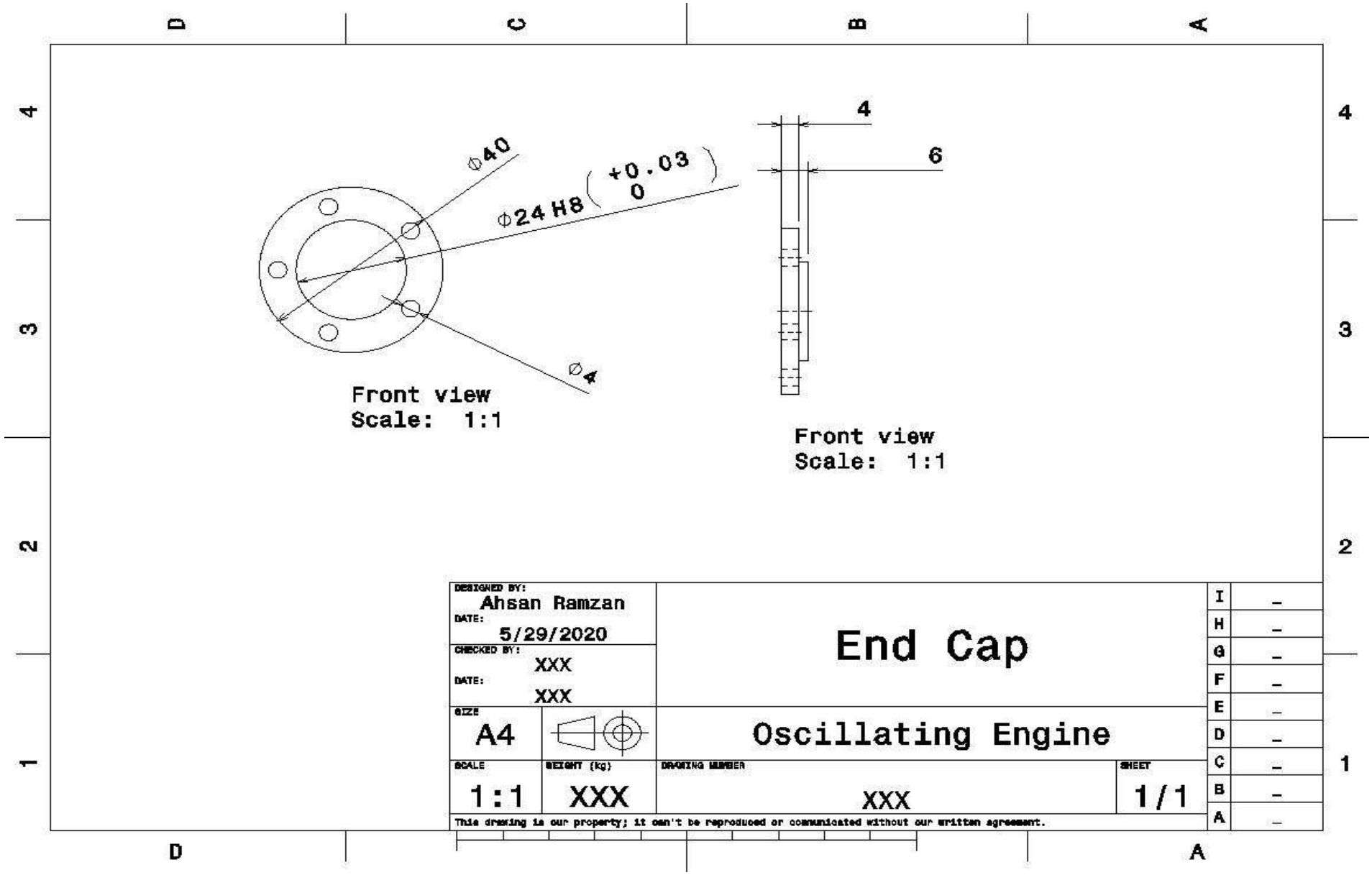
Ø40
Ø24 H8 (+0.03 / 0)
Ø4
Front view
Scale: 1:1
4
6
Front view
Scale: 1:1
DESIGNED BY:
Ahsan Ramzan
DATE:
5/29/2020
CHECKED BY:
XXX
DATE:
XXX
End Cap
SIZE
A4
Oscillating Engine
SCALE
1:1
WEIGHT (kg)
XXX
DRAWING NUMBER
XXX
SHEET
1/1
This drawing is our property; it can't be reproduced or communicated without our written agreement.

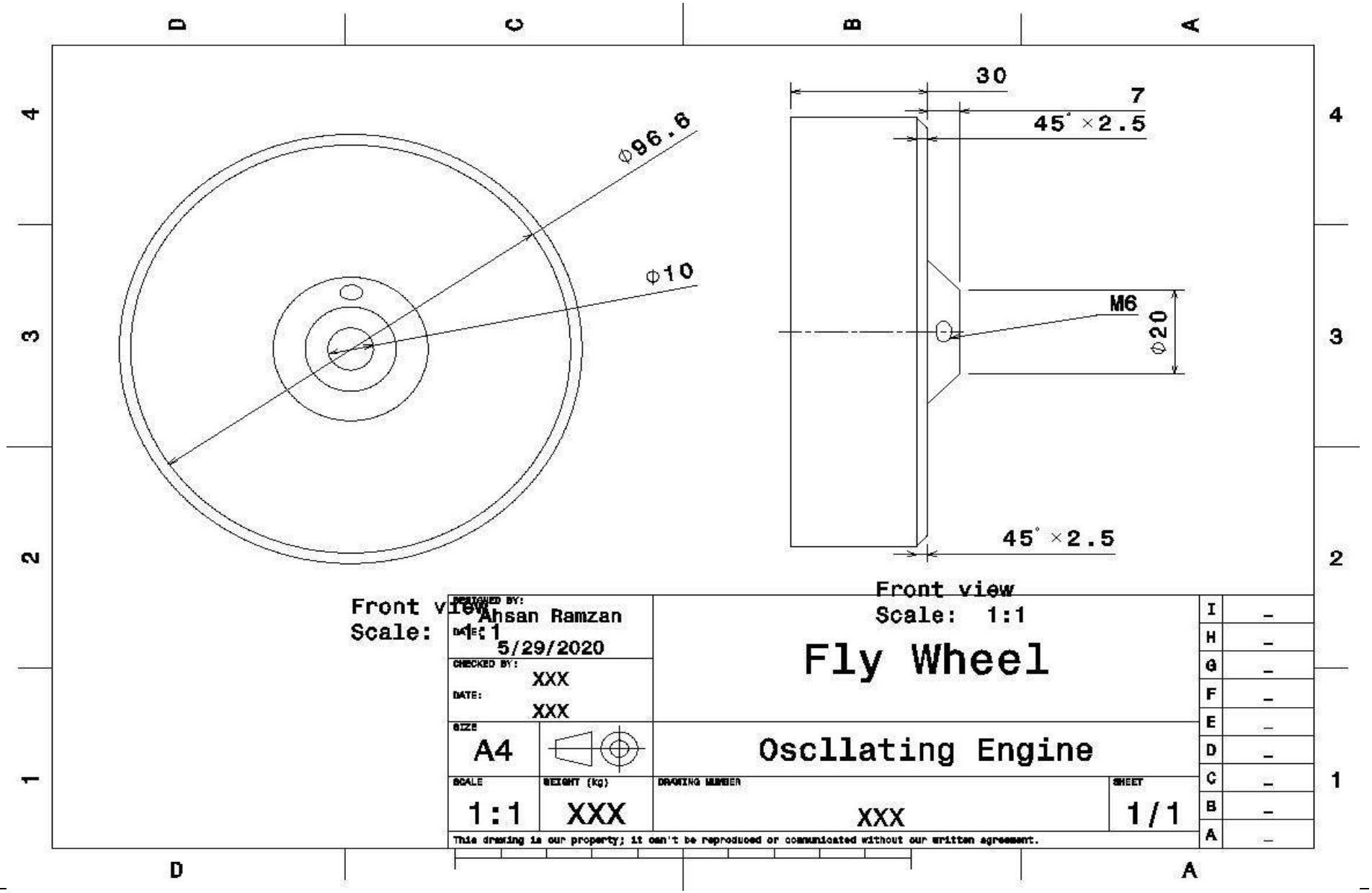
30
7
45° ×2.5
⌀96.6
⌀10
M6
⌀20
45° ×2.5
Front view
Scale: 1:1
Front view
Scale: 1:1
DESIGNED BY: Ahsan Ramzan
DATE: 5/29/2020
CHECKED BY: XXX
DATE: XXX
Fly Wheel
SIZE A4
Oscllating Engine
SCALE 1:1
WEIGHT (kg) XXX
DRAWING NUMBER XXX
SHEET 1/1
This drawing is our property; it can't be reproduced or communicated without our written agreement.

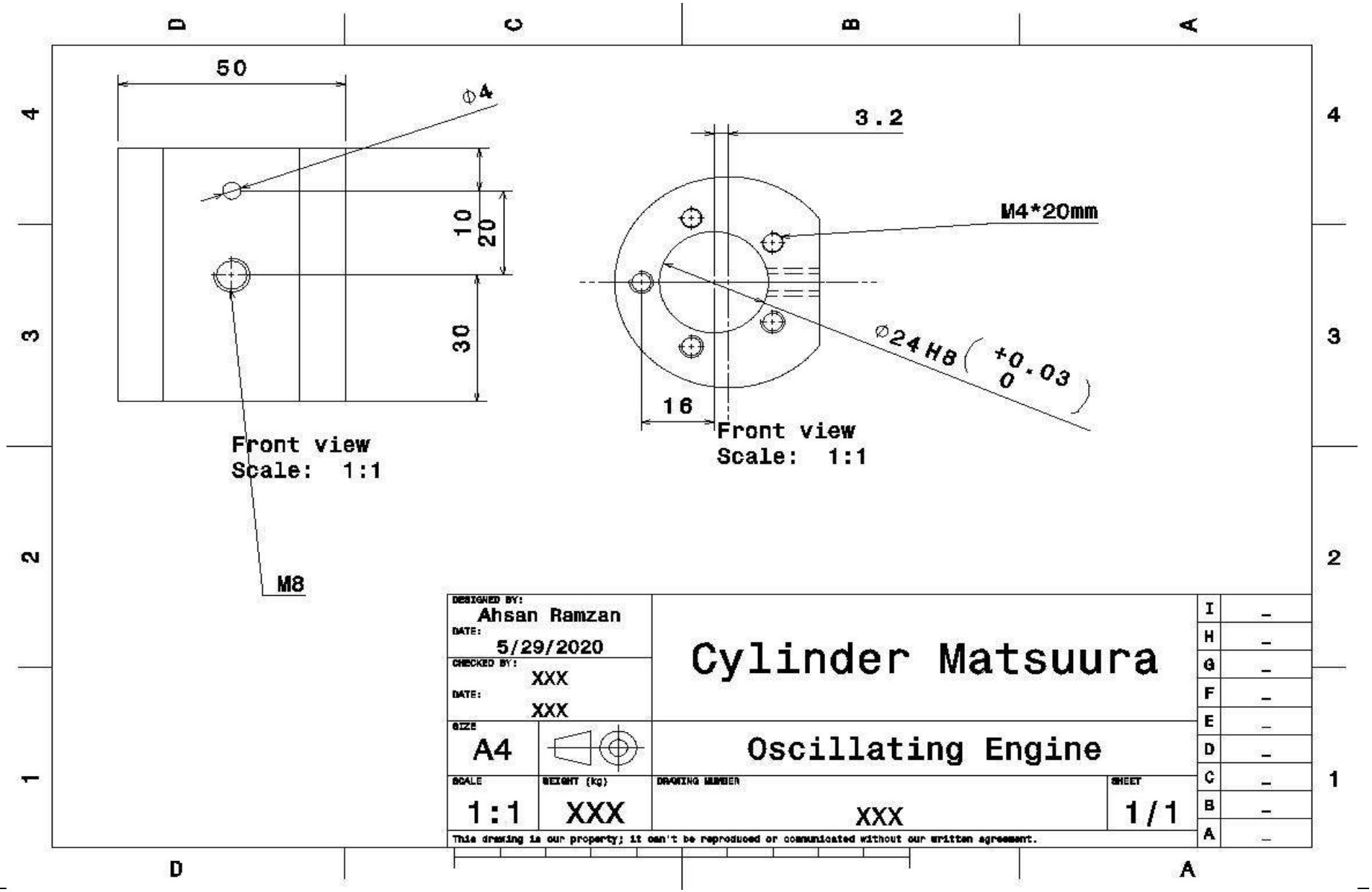
50
⌀4
10
20
30
Front view
Scale: 1:1
M8
3.2
M4*20mm
⌀24 H8 (+0.03 0)
16
Front view
Scale: 1:1
DESIGNED BY:
Ahsan Ramzan
DATE:
5/29/2020
CHECKED BY:
XXX
DATE:
XXX
Cylinder Matsuura
SIZE
A4
Oscillating Engine
SCALE
1:1
WEIGHT (kg)
XXX
DRAWING NUMBER
XXX
SHEET
1/1
This drawing is our property; it can't be reproduced or communicated without our written agreement.

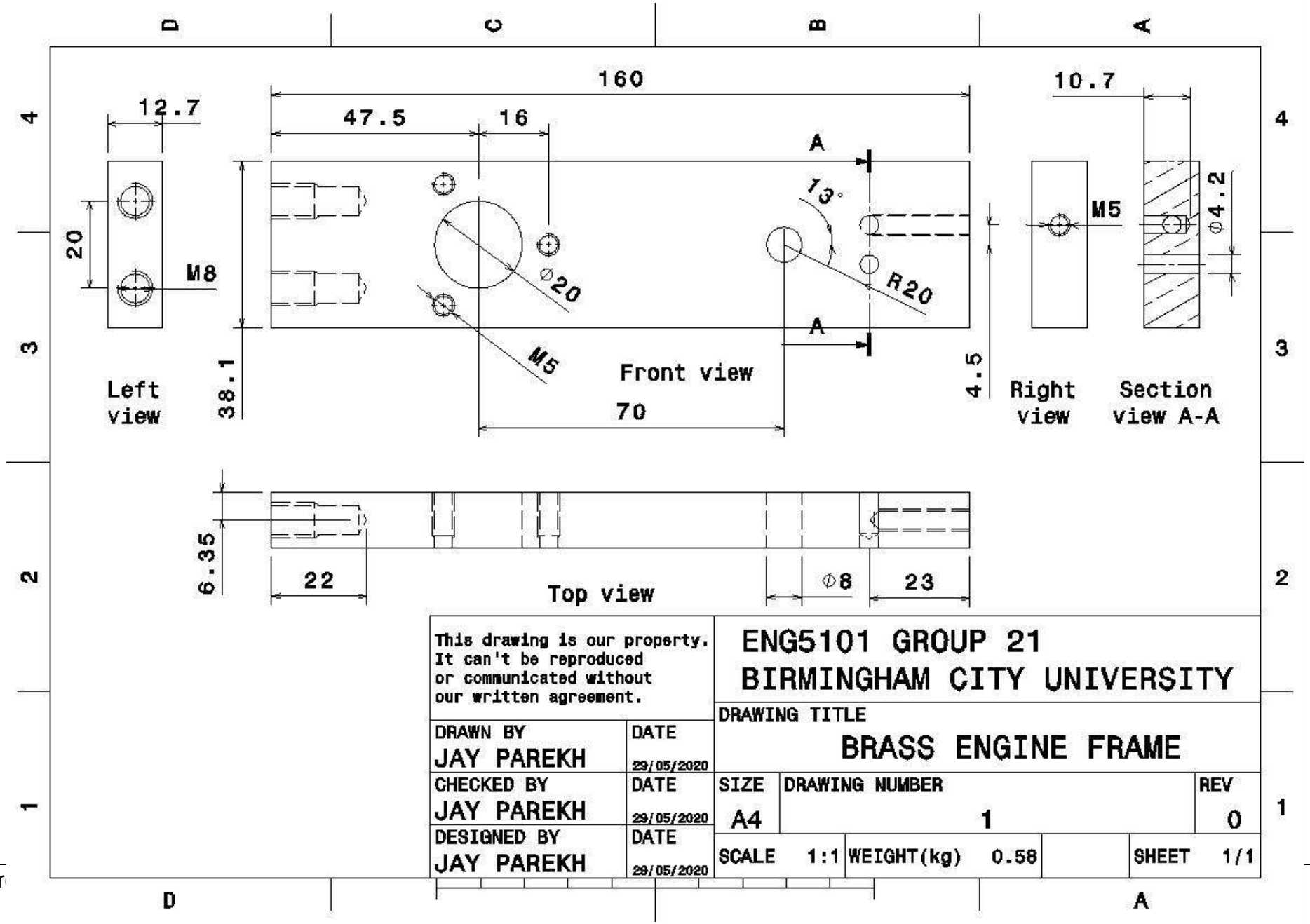
160
12.7
47.5
16
10.7
A
13°
M5
⌀4.2
20
M8
⌀20
R20
A
M5
38.1
Front view
4.5
Left view
70
Right view
Section view A-A
6.35
22
Top view
⌀8
23
This drawing is our property. It can't be reproduced or communicated without our written agreement.
ENG5101 GROUP 21
BIRMINGHAM CITY UNIVERSITY
DRAWING TITLE
BRASS ENGINE FRAME
DRAWN BY
JAY PAREKH
DATE
29/05/2020
CHECKED BY
JAY PAREKH
DATE
29/05/2020
DESIGNED BY
JAY PAREKH
DATE
29/05/2020
SIZE
A4
DRAWING NUMBER
1
REV
0
SCALE 1:1
WEIGHT(kg) 0.58
SHEET 1/1

Kinematic Analysis

The inspection of joints within the components of the air driven engine was one of the outcomes of this project. By reviewing the available joints on CATIA V5, the required joints selected for each component of the assembly are shown following a sketch.

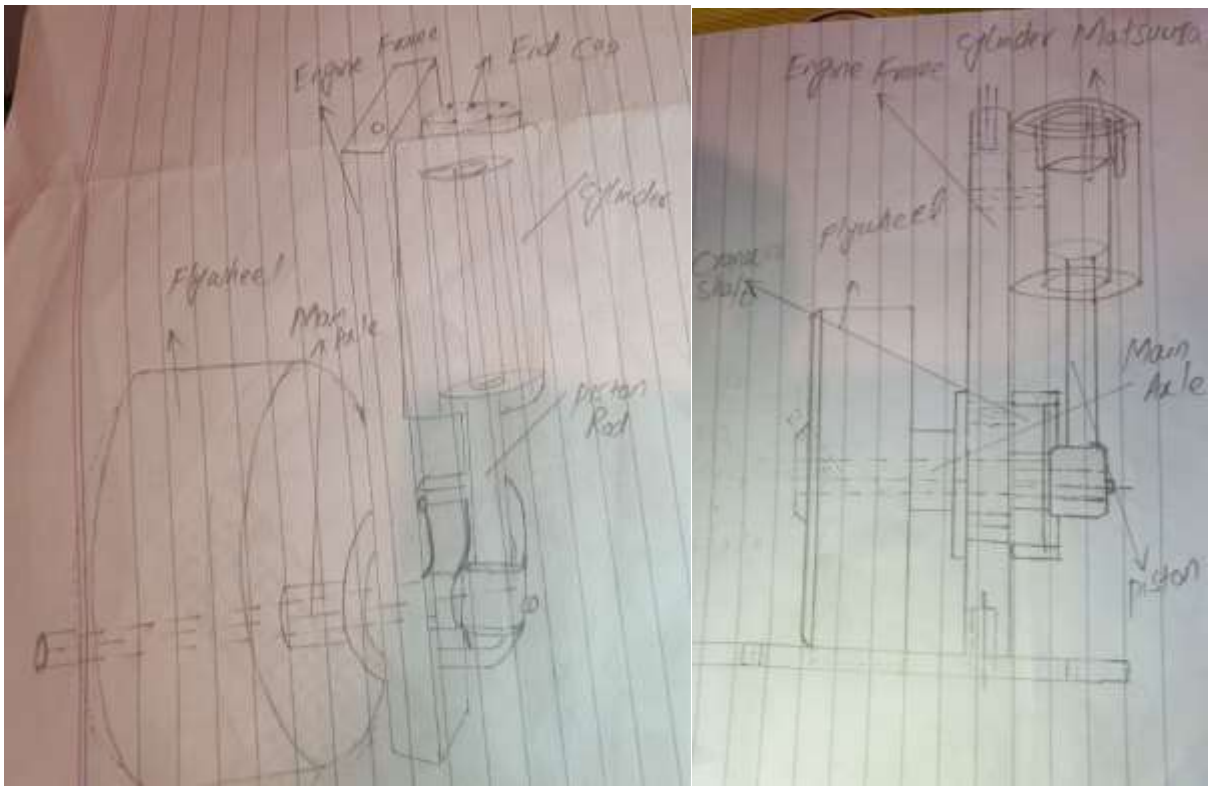

Apart from the frame, cylinder, piston and end cap, the group selected a revolute joint between all components of the engine due to their rotational movement about a single position apart from the cylinder end cap and cylinder. As the piston moves axially along the plane of the cylinder walls during rotation of crank shaft, a prismatic joint was selected for the piston to cylinder joint. A rigid joint was used to secure the end cap to the cylinder as its function is to seal the expansion chamber. The frame was fixed to the base to prevent any movement of the assembly from causing damage. (Kinematic Joint - an overview | ScienceDirect Topics, 2020).

Inspection of Piston Rod and Cylinder

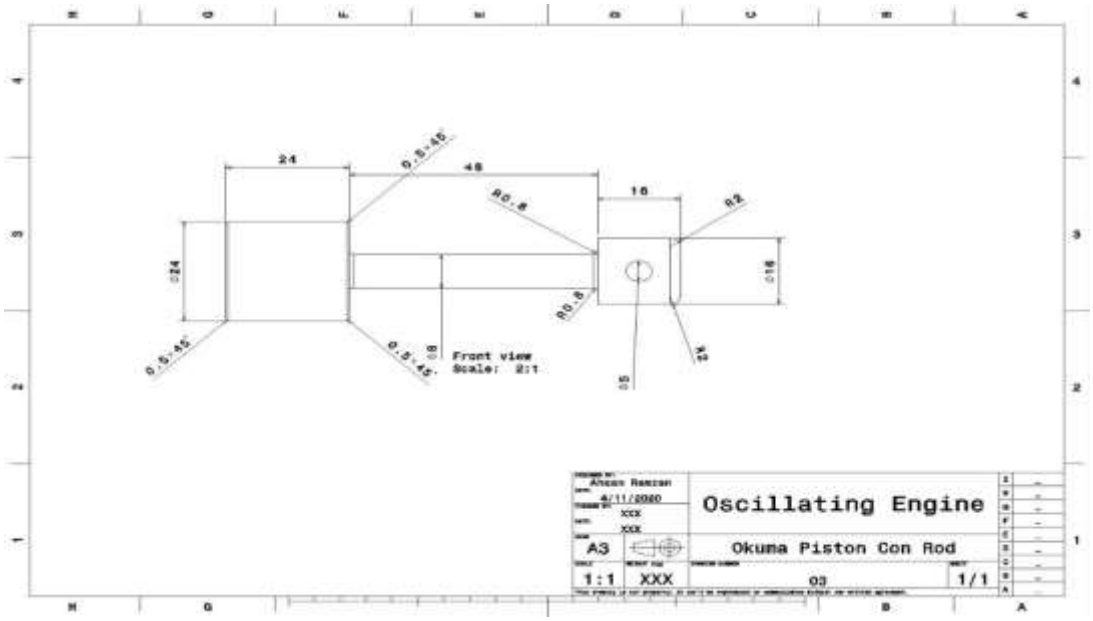

Fits and tolerances

When two parts are assembled, the relation resulting from the difference between their sizes before assembly is called a fit.

The piston head fits within the cylinder of the air driven Engine. According to the kinematics of the assembly, there must be an accurate fit witch some clearance between them. The dimension of piston rod and cylinder are given below:

Hole size of the cylinder in which piston is placed (mm)	24
Outer diameter of the piston (mm)	24

The gap between the hole and the shaft is called clearance. Clearance is determined by the size difference between the parts. The BS4500 ISO Fits and Tolerances table is used to specify the size specific tolerance of parts. The amount of interference or clearance is achieved by specifying the type of fit for the part purpose and diameter.

The chosen fit for cylinder and piston is a clearance fit of H8 for the cylinder and h7 for the piston, which is close running fit. A close running fit is required to prevent air escaping around the piston during operation, although a tighter fit would cause resistance in the movement of the piston, reducing efficiency and increasing wear. The following results are obtained from the BS4500 ISO tables.

- For the piston:

h7 shaft	Max	Min
Tolerance (µm)	+0	-21
Diameter (mm)	24.000	24.0210

- For the cylinder:

H8 hole	Max	Min
Tolerance (µm)	+33	-0
Diameter (mm)	24.033	24.000

Inspection of end cap and cylinder

Comparing with other two fits, transition fit is far better in this case as in clearance fit the shaft diameter is always less than the hole diameter.

For interference fit the minimum diameter of the shaft is always greater than maximum diameter of the hole. The end cap will be secured with screws and therefore will not require a tighter fit. Brass easily deforms as it has a lower Young's modulus than Steel (50GPa lower). Due to the low compression ran within the cylinder, the transition fit proves sufficient for preventing pressure loss as air is high density

(Young's Modulus - Tensile and Yield Strength for common Materials, 2020).

A locational clearance fit is a compromise between interference and clearance fits, best used for accurate location, with ease of disassembly (Limited Slip Differential - Types and Package boilers- Parts, 2020).

Using a 20mm hole and shaft with H7/h6 tolerance, the following results are obtained from the BS4500 ISO tables.

- For cylinder:

H7 hole	Max	Min
Tolerance (µm)	+21.00	- 0
Diameter (mm)	20.0210	20.0000

- For end cap:

h6 shaft	Max	Min
Tolerance (µm)	0	- 13
Diameter (mm)	20.0000	19.9870

6 Discussion

The discussion compares the pros and cons of CIMCO and ShopMill to decide a feasible alternative.

Both

- Support drag and drop editing and rearrangement.
- Offer a database of books of tables for tolerances, fits and thread data.
- Allow on the fly modification to programs.
- Provide a video simulation of the machining program.
- Expensive initial layout

ShopMill

- Does not require CNC knowledge to operate, loaded with wizard to assist in design.
- Each machining operation, of multiple movements and tool changes, is generated as one step.
- The same position pattern can be used for multiple operations to save repeated lines.
- ShopMill saves time spent producing by optimizing the retraction plane so time can be saved between operations.
- Training is only useful for ShopMill, meaning if new software is used, staff would have to be retrained.
- Expensive to repair due to complex software.

(Milling made easy with ShopMill, 2020)

CIMCO

- Supports unique G codes in the simulation of toolpaths. Commonly used Haas cycles including G12/G13 for circular pockets, G70/G71/G72 for drill patterns, G150 for pocket milling, G53 for tool safe position and M97 for local subroutines.
- CIMCO supports saving NC backplots as a DXF file. Each Tool in Cimco is saved to a separate layer or level. Rapid moves are shown in red and feed moves are green.

- The NC Assistant in CIMCO moves the cursor to any M or G code and it will identify the code and allow you to modify values using an interactive interface.
- Complex training required, but beneficial in the long run.

  (Features | CIMCO Edit | CIMCO, 2020)

The most effective software was ShopMill for its ease of use and compatibility, although with its high initial outlay and manufacturer specific training, this was a less feasible option. CIMCO was a balance of automation and CNC due to the fact the operator did require existing knowledge of G codes in order to program the machine. By investing in training staff to use CNC code, the skillset can be used across many CNC machines, regardless of their manufacturer. Although the initial outlay is only slightly less than with ShopMill, CIMCO is much better value.

7 Conclusions

In conclusion, the project went as planned, with some interruption due to the lockdown phase. The assembly was mostly manufactured.

The BS4500 ISO fits and tolerances are crucial to the kinematics of an assembly, using an interference fit can keep parts rigid where a permanent application is necessary, whereas transition fits allow parts to be precisely located although can be disassembled using basic tools. A clearance fit is used for assemblies where little accuracy is required and there are regular changes in temperature, which can cause other fits to seize.

The kinematic joints necessary were identified as prismatic, rigid, fixed and revolute, and the assembly was successfully simulated, albeit using hand drawings due to a lack of software access.

The team learnt how to program their assigned machines, with an insight into manufacturer specific features, allowing for lower cost, shorter production times and shorter machining times. The most effective software was ShopMill for its ease of use and compatibility, although with its high initial outlay and manufacturer specific training, this was a less feasible option. CIMCO was a balance of automation and CNC due to the fact the operator did require existing knowledge of G codes in order to program the machine. By investing in training staff to use CNC code, the skillset can be used across many CNC machines, regardless of their manufacturer. Although the initial outlay is only slightly less than with ShopMill, CIMCO is much better value.

The engineering drawings were produced at a 1:1 scale on A4 paper to ensure the drawings were legible. By effectively using section view as well as additional features on CATIA to show threads, centre lines and hidden lines to show holes. The tolerances of the cylinder, piston and end cap were set using CATIA's extensive database of tolerances, and were set automatically.

The team was initially 5 members although with one member leaving and the other member sick, the workload had to be compensated for by the remaining 3 members, who prioritised the necessary actions to be taken. The project was split into various sections to which each

member was assigned. With a lack of English knowledge as well as computer illiteracy within the group, it was challenging at times to keep the team motivated.

8 Recommendations

Many projects follow on from previous work and, owing to time constraints and the generation of ideas whilst undertaking the work, lead on to the possibility of further work. These recommendations should be summarised briefly. You can also include thoughts of how the work, process, results can be improved, e.g. how errors can be reduced.

Next time the engine is produced, a higher compression ratio could be used to extract more energy from the compressed air. In order to do this a material with a greater Young's modulus, such as steel could be used along with lower tolerances to withstand higher pressures. The crankshaft could spin on bearings to reduce internal friction, reducing wear and lengthening service intervals. Friction may be further reduced by using lubrication, in the form of copper grease, which is galvanically compatible with brass, therefore there will be no surface deterioration during extended use (Metal compatibility: galvanic corrosion | Brass and Copper | Blog | RMMCIA, 2020). If the engine is designed to run at high RPM, the frame can be submersed in a casing filled with low viscosity oil in order to cool and lubricate the assembly.

During the machining process, the team should share their expertise for each program so that they can train on multiple machines simultaneously.

Teams should be designated with an even skill set, rather than an unbalanced skill set, to prevent one member of the group becoming burdened with the majority of the project due to others' learning or language difficulties.

9 References

Research Papers

1. Docshare02.docshare.tips.2020.[online] Available at<http://docshare02.docshare.tips/files/15843/158436414.pdf> [Accessed 28 May 2020].
2. Singh, V., 2017. *Compressed Air Engine*. [online] Ijsrp.org. Available at: <http://www.ijsrp.org/research-paper-0717/ijsrp-p6747.pdf> [Accessed 2 April 2020]
3. Iosrjournals.org. 2020. *Compressed Air Engine*. [online] Available at: <http://www.iosrjournals.org/iosr-jmce/papers/vol11-issue6/Version-4/O0116499103.pdf> [Accessed 5 April 2020].
4. Cimco.com. 2020. *Cimco Sotware Brochure*. [online] Available at: <https://www.cimco.com/documents/cimco/brochures/en/cimco-software-brochure-en-lowres.pdf> [Accessed 28 May 2020].
5. +, T. and Cars, B., 2020. 19Th Century Compressed Air Cars And Street Cars: Gone And Forgotten. [online] Alternate History of the World. Available at: <https://www.stolenhistory.org/threads/19th-century-compressed-air-cars-and-street-cars-gone-and-forgotten.96/> [Accessed 12 April 2020].
6. Haskel. 2020. Pneumatic-Driven Liquid Pumps | High Pressure Liquid Pump | Haskel. [online] Available at: <https://www.haskel.com/products/pneumatic-pumps/liquid-pumps/> [Accessed 12 April 2020].
7. Engineeringtoolbox.com. 2020. Young's Modulus - Tensile And Yield Strength For Common Materials. [online] Available at: <https://www.engineeringtoolbox.com/young-modulus-d_417.html> [Accessed 29 May 2020].
8. Zeropollutionmotors.us. 2020. Zero Pollution Motors | The First Compressed Air-Powered Car. [online] Available at: <https://zeropollutionmotors.us/> [Accessed 12 April 2020].
9. Limited Slip Differential - Types, a. and Package boilers- Parts, D., 2020. Engineering Fits - Clearance, Transition , Interference Fit. [online] Learn Mechanical Engineering. Available at: <https://learnmech.com/engineering-fits-clearance-transition-interference-fit/> [Accessed 28 May 2020].

10. Sciencedirect.com. 2020. Kinematic Joint - An Overview | Sciencedirect Topics. [online] Available at: <https://www.sciencedirect.com/topics/engineering/kinematic-joint> [Accessed 29 May 2020].
11. Cache.industry.siemens.com. 2020. Milling Made Easy With Shopmill. [online] Available at: <https://cache.industry.siemens.com/dl/files/380/28803380/att_20608/v1/TUSM_0806_en.pdf> [Accessed 29 May 2020].
12. CIMCO. 2020. Features | CIMCO Edit | CIMCO. [online] Available at: <https://www.cimco.com/software/cimco-edit/features/> [Accessed 29 May 2020].
13. Rmmcia.com. 2020. Metal Compatibility: Galvanic Corrosion | Brass And Copper | Blog | RMMCIA. [online] Available at: <http://www.rmmcia.com/blog/metal-compatibility-galvanic-corrosion> [Accessed 29 May 2020].
14. Xyzmachinetools.com. 2020. XYZ-SMX 3500 Prototrak Bed Mill | XYZ Machine Tools. [online] Available at: <https://xyzmachinetools.com/xyz-looks-to-grow-european-distribution-network-at-emo/xyz-emo-smx3500/> [Accessed 29 May 2020].
15. Limited Slip Differential - Types, a. and Package boilers- Parts, D., 2020. *Engineering Fits - Clearance, Transition , Interference Fit*. [online] Learn Mechanical Engineering. Available at: <https://learnmech.com/engineering-fits-clearance-transition-interference-fit/> [Accessed 28 May 2020].
16. Cncmachines.com. 2020. Okuma CNC - Used Okuma CNC Machines - Cncmachines.Com. [online] Available at: <https://cncmachines.com/okuma/l> [Accessed 29 May 2020]

Books

Hearn, E. J. (1997). Mechanics of Materials 2: The mechanics of elastic and plastic deformation of solids and structural materials. Butterworth-Heinemann

SAE Papers

Das, S. and Roberts, C. (2013). Factors affecting heat transfer in a diesel engine: Low heat rejection engine revisited. SAE International. SAE Technical Paper 2013-01-0875.

Journals

Cousins, S. H. and Bueno, J. G. andCoronado, O. P. (2007). Powering or de-powering future vehicles to reach low carbon outcomes: the long term view 1930—2020. Journal of Cleaner Production, 15(11):1022–1031.